UNIVERSITY OF BENIN

DEPARTMENT OF MECHANICAL ENGINEERING

FACULTY OF ENGINEERING

DESIGN AND FABRICATION OF A PET BOTTLE CRUSHER

BY

1.EMAKPORE TEJIRI	ENG1708917
2.OGEDEGBE VICTOR OSASUMWEN	ENG1704321
3.JACK ANDREW	ENG1704305
4.ITEGBOJE DAVID OMOKHOWA	ENG1708897
5.OSESU AZIEGBEMHIN	ENG1704273
6.ANUGBOBA EHIJIELE	ENG1810523
7.IWAYO AMOS OGHENEKARO	ENG1604252

SUPERVISED BY: ENGR. DR. IB OWUNNA

DEPARTMENT OF MECHANICAL ENGINEERING,

FACULTY OF ENGINEERING

This Project Was Conducted in The Department of Mechanical Engineering, University of Benin. It Was Undertaken in Partial Fulfillment of The Requirements for The Award of a Bachelor of Engineering (B.Eng.) Degree in Mechanical Engineering.

SEPTEMBER 2023

CERTIFICATION

This is to certify that the project work titled " **DESIGN AND FABRICATION OF A PET BOTTLE CRUSHER**" was diligently carried out by the following students:

1. EMAKPORE TEJIRI	**ENG1708917**
2. OGEDEGBE VICTOR OSASUMWEN	**ENG1704321**
3. JACK ANDREW	**ENG1704305**
4. ITEGBOJE DAVID OMOKHOWA	**ENG1708897**
5. OSESU AZIEGBEMHIN	**ENG1704273**
6. ANUGBOBA EHIJIELE	**ENG1810523**
7. IWAYO AMOS OGHENEKARO	**ENG1604252**

This project was conducted in the Department of Mechanical Engineering, University of Benin, Benin City, Edo State, Nigeria. It was undertaken in partial fulfillment of the requirements for the award of a Bachelor of Engineering (B.Eng.) degree in Mechanical Engineering.

Date of Completion: 21 September 2023

Supervisor's Name: ENGR. DR. IB OWUNNA

This certification is issued in recognition of the successful completion of the project work by the aforementioned students.

_____

[Signature]

Department of Mechanical Engineering

University of Benin

Benin City, Edo State, Nigeria

DEDICATION

I dedicate this project to my Elohim for guiding me through the process of this project research

ACKNOWLEDGMENT

I dedicate this project to my parents Mr and Mrs Emmanuel and Mabel Itegboje and My siblings, Joy, Blessing, Hope, Daniel and King Itegboje for their love and support during the duration of this project research.

ABSTRACT

In Nigeria today and in the world at large, PET bottle waste has grown to become hazardous as it constitutes part of the non-biodegradable waste. Hence, recycling becomes necessary to curb its menace. This project work is centered on designing and fabricating a PET bottle crushing machine from locally sourced materials for both home and industrial use in an attempt to proffer solution to the PET waste problem in Nigeria.

Preliminary tests and mechanical factors were extensively evaluated on the conceptual designs to ensure that the design that most suits the purpose was selected and detail design was carried out. Experiment to determine the power required to overcome the shear resistance of the PET bottles was carried out and it was discovered that 10hp at 450N was the power required. Finite element analysis was also performed on the cutting blade to inspect the materials response to stresses and the corresponding deformation. Furthermore, a design study was carried out in order to ascertain the minimum and maximum loads that can be handled.

Tests carried out on the machine showed its efficiency to be 82.2% which is only 6% less than the efficiency of foreign counterparts.

Contents

CERTIFICATION ..... **Error! Bookmark not defined.**

DEDICATION ..... **Error! Bookmark not defined.**

ACKNOWLEDGEMENT ..... **Error! Bookmark not defined.**

ABSTRACT v

CHAPTER ONE 1

1. Background to Study 1

1.2. Statement of problem 3

1.3 Aim and objectives of the research 4

1.3.1 Aim 4

1.3.2 Objectives 4

1.6 Economic importance of the research 5

1.7 Uses of recycled waste from plastic bottles 5

CHAPTER TWO 6

LITERATURE REVIEW 6

2.1 History of plastic 6

2.2. Definitions of waste 7

2.3. Types of waste 7

2.3.1. Solid Waste: 7

2.3.2. Liquid Waste 7

2.3.3. Gaseous Waste 8

2.4 Sources of solid waste 8

2.5 Waste management 9

2.5.1 Waste Management Hierarchy 10

2.5.1.1 Source Reduction and Reuse 11

2.5.1.2. Recycling/Composting 11

2.5.1.3. Energy Recovery 12

2.5.1.4. Treatment and Disposal 12

2.6 Types of plastics 12

2.6.1. Thermoplastic plastics 12

2.6.2. Thermosetting Plastics 12

2.7. Background on PET 14

2.8 Polyethylene terephthalate (PET) 16

2.8.1 Chemical Properties of PET 16

2.8.2 Physical properties of PET 17
2.9. PET bottle waste 18
2.9.1. Source of PET waste 19
2.9.2. PET waste management 19
2.10 Types of recycling 20
2.10.1. Primary (re-use) recycling 20
2.10.2. Mechanical recycling (or secondary recycling) 20
2.10.3. Tertiary (chemical) recycling 21
2.10.4. Feedstock recycling 21
2.10.5. Background on PET bottle recycling industry 21
2.11. Collection 23
2.12. Sorting 24
2.13. Shredding 24
2.14. Washing 25
2.15. Pelletizing 25
2.16. PET Bottle Recycling Industry in Nigeria 25
2.16.1 Injection moulding 26
2.16.2. Extrusion moulding process 27
2.16.3. Blow moulding 27
2.16.4. Injection blow moulding 28
2.16.5. Extrusion blow moulding 28
2.17. Hazard of plastic wastes 28
2.17.1 Land 28
2.17.2 Water 29
2.17.3 Air 29
2.18. Methods of recycling plastic waste bottles 29
2.18.1. Mechanical Recycling 29
2.18.2. Feedstock or chemical recycling 30
2.18.3. Incineration of plastic wastes 30
2.19. What are crushers 30
2.19.1. Jaw crusher 31
2.19.2. Gyratory crusher 32
2.19.3. Cone crusher 33
2.19.4 Impact crusher 33

2.20. Mineral sizer 34
2.21. Expected particle size from plastic bottle crushing 34
CHAPTER THREE 36
3. Research methodology 36
3.1 Theory of mechanical crushing of waste plastic bottles 36
3.2 Description of crushing 36
3.3 Feasibility studies on used PET bottles 37
3.4 Preliminary design/test 37
3.5. Basic component of the machine 38
3.5.1. Main Frame 38
3.5.2 The Hopper 38
3.5.3 The crushing unit 38
3.5.4 Electric Motor and Pulley System 38
3.5.5 The discharge unit 38
3.5.6 Shafts Design 38
3.5.7 Bearings 39
3.5.8 Speed Reducers 39
3.5.9 Fasteners 39
3.5.10 Base Support 39
3.6. Design requirement or functional requirement 39
3.7 Design consideration 40
3.8. Design concepts 40
3.8.1. Concept one (Simple Crank Mechanism) 41
3.8.1.1Working Mechanism 42
3.8.2. Design concept two (Rotary blade against a fixed blade) 42
3.9. Selection of concept for detail design 44
3.10 DETAIL DESIGN 45
3.10.1 Experimental Design 45
3.10.2 Crushing power required 46
3.10.3 Belt design 47
3.10.4 Design for velocity ratio for belt drive 51
3.10.5 Bearing Design 53
3.10.6 Selection of bearing C 54
3.10.7 Selection of bearing D 56

3.10.8 Bending moment diagram 57
3.11. Fabrication 59
3.11.1. Cutting process 59
3.11.2. Welding process 59
3.11.3 Grinding and Filling operation 60
3.11.4. Drilling and boring operation 60
3.11.5. Fastening 60
3.11.6. Painting 60
3.11.7. Assembly process 60
3.11.8. Safety precaution taken 60
CHAPTER FOUR 62
RESULTS AND DISCUSSION 62
4.1 Results of Feasibility Studies 62
4.2 Shearing Force and power experiment results 65
4.3 Computer Aided Design Results 69
4.4 Design Study 70
4.5 Static Stress Analysis 71
CHAPTER FIVE 73
5.1 Conclusion 73
5.2 Recommendations 73
References 74
Appendixes 80
Appendix 1: Orthographic Drawing of the PET bottle crusher Assembly 80
Appendix 2: Part Name and numbers of PET bottle Assembly 81
Appendix 3: Orthographic view of the blade 82
Appendix 4: Orthographic view of the hopper 83
Appendix 5: Orthographic view of the frame 84
Appendix 6: Pulley for Blade 85
Appendix 7: Orthographic view of Pulley for motor 86
Appendix 7: Belt 87

TABLE OF FIGURES

Figure 2.1: Waste Management Hierarchy (U.S EPA, 2013). 11

Figure 2.2: Structure and chemical equation of PET (EFBW 2012) 15

Figure 2.3: Polyethylene Terephthalate (Venkatachalam et al., 2012) 17

Fig. 2.4: Used PET bottles littered in drainage at Uselu Lagos road, Edaiken, Benin City. 19

Fig. 2.5: PET Waste Management System 20

Figure 2.6: Typical Shredded Plastic Particle 25

Figure 3.1: Collected PET plastic waste bottle within University of Benin environment 37

Figure 3.2: Isometric view of a Simple Crank Mechanism 42

Figure 3.3: Isometric view of design concept two Second (Rotary blade against a fixed blade) . 43

Figure 3.1: Analysis of a guillotine 45

Figure 3.2: Schematic of Forces acting at the Handle 46

Figure 3.3: Schematic of Belt with pulleys 1 and 2 48

Figure 3.4: Schematic Diagram of Belt Tension 48

Figure 3.5: Schematic Diagram of Weight and Bearing Reactions 53

Figure 3.6: Free Body Diagram of shaft 57

Figure 3.7: Shear Force and Moment Diagram 58

Figure 4.1: Percentage Composition per household waste generated in Benin City, Oredo LGA 64

Figure 4.2: Graph of Force against Effective Crushing force and Torque 67

Figure 4.3: Graph of Crushing Force (Fm) against Power 67

Figure 4.4 present the plot of mass of properly crushed PET plastic waste bottle against crushing time. 69

Figure 4.5: Graph of Maximum Von Mises Stresses against Applied Force 71

Figure 4.6: Result of Von-mises Stress Obtained from the Crushing Blade Analysis 71

Figure 4.7: Result of Displacement Obtained from the Crushing Blade Analysis 72

LIST OF TABLES

Table 2.1: Sources of Solid Waste (Ojoawo et al. 2011) 8

Table 2.2: Average component of solid waste generated per person per day in Oredo LGA. 10

Table 2.3: Physical Properties of Polyethylene Terephthalate (Kamal, 2010) 18

Table 3.1: Decision matrix 44

Table 3.2: BILL OF ENGINEERING MATERIALS AND EVALUATION 61

Table 3.3: Total cost 61

Table 4.1: Feasibility results of solid waste characterization 62

Table 4.2: Results from shear force experiment on guillotine 65

Table 4.3: Result Obtained from the PET bottles Crushing Machine 67

Table 4.5: Material Properties of the crushing blade 69

Table 4.6: Bearing Connector Forces 70

Table 4.7: Table showing the Von Mises stress induced as a result of varying force 70

CHAPTER ONE

1. Background to Study

One of the most obvious environmental problems encountered in most developing countries is Solid Waste Management (SWM). Waste has been defined as any material that is discarded or abandoned because it is seen to be stranded worthless. Municipal solid waste (MSW) also known as urban solid waste is defined as non-air and sewage emissions generated within and disposed by the municipality. These includes predominantly household waste, commercial refuse, construction and demolition debris, dead animals and abandoned vehicles (Ojoawo et al., 2011). Municipal Solid Waste (MSW) is mainly characterized by paper, vegetable matter, plastics, textiles, metals, rubber and glasses (PWMI, 2004). The problem of MSW management is now a global one that must be addressed in order to solve the world's environmental and energy problems. This is as a result of increasing population growth, high rate of consumption, high urbanization rates and lack of effective technology to control the menace associated with it (Al Seadi, 2001). In recent times, studies have shown that apart from the environmental pollution and contamination of ground waste by organic waste materials, plastic waste such as indiscriminate disposal of polyethylene terephthalate (PET) bottles is one of the waste management practices hampering the developmental and aesthetical state of our environment particularly in developing countries.

Polyethylene terephthalate is a polyester made from terephthalic acid (a di-carboxylic acid) and ethylene glycol (a di-alcohol) through the process of polymerisation. Since the introduction of PET bottles over 60 years ago, it has been a means of packaging water, carbonated soft drinks, edible oil, liquor, household items, Others (for Packaging juices, food stuffs etc.). However, manufacturers as well as consumers have grown increased interest in the use of PET bottles due to many reasons (Tukur, 2012).

Long before now, most persons worldwide made use of drinking cups for taking fluid into their system, which can also be used by a series of other individuals with little or no care about the hygiene level of the drinking cup, but it was discovered after so many years of research that some mouth diseases were contagious, which is caused by different viruses and sharing of cup was a major aid to the spread of these disease-causing virus (Gill, 1988). Some of the mouth disease include fever, painful blister-like sores in the mouth, and rashes that may appears as blisters in the mouth. In attempt to reduce the spread of these disease-causing

agents, PET bottles became widely accepted as a result of the fact that are disposable, inexpensive, lightweight and made of durable materials, which can readily be moulded into different shapes and sizes that find use in a wide range of applications (Hopewell et al., 2009). Moreover, PET bottles and other non-biodegradable materials from dumpsites end up blocking drainage systems during raining season, causing flood and waterlog in residential areas which oftentimes serve as breeding ground for vectors such as mosquitoes. According to Oseni (2012), plastic materials is more or less non-biodegradable as it can remains undecomposed in the ground for several thousands of years. Recycling is an aspect of environmental engineering that deals with the development of technically reasonable solutions to environmental problems which may involve designing a sustainable approach that can convert waste materials to useful items, thereby, avoiding the use of virgin raw materials which depending on the production process constitutes high level of environmental pollution, requires high energy and huge cost of production (Tester et al., 2005). Brandup (1996) also reported that the manufacturing of plastic bottles from raw material requires high energy input, and plastics are not degradable materials, therefore its accumulation after use generates environmental problem. Plastic bottle recycling is bound to realize a lot of saving in production costs, conserve limited resources, and alleviate environmental pollution (Bruvoll, 2001).

A plastic crushing machine is that which performs the function of crushing plastic materials into granules or shreds for recycling and production of new products rather than using virgin raw materials for production. This study is focused on the design of a crushing machine for handling of used PET bottles improvement of technologies used for processing and manufacturing PET bottles (European Commission, 2013). From the aforementioned point of view, crushing of PET bottles for recycling is cheaper than reproducing plastic products from virgin raw material, and can also help in controlling the waste disposal problems ravaging the environments in developing countries. For these reasons, there is a need for an expansion of plastic recycling programs as well as cheaper machine to handle the problems associated with plastic waste management particularly PET bottles which has a wide range of application worldwide. The fundamental goals of any plastic recycling system are to collect plastic wastes, crush them into shreds (readily available for recycling) in order to from being landfilled or disposed at dumpsites where it remains undecomposed for several years (Pringle, 2004). The essence of waste (such as PET bottles) recycling system is therefore classified in terms of both environmental efficiency such as the percentage of waste recovered or reused and economic efficiency such as the costs of the recycling system (Bruvoll, 2001). Plastics

such as PET is one of the most commonly used materials in the world today (Elias, 2003). The huge quantities of plastic products currently being marketed in developing countries possibly find their way to the waste dumpsites (Metin et al, 2003), and this creates serious environmental problems for a number of reasons. The inert nature of plastic bottles renders them resistant to bio-degradation which leads to an increase in the number of plastic wastes in dump sites (Harper et al, 2003). Moreover, the presence of plastic wastes in the environment is considered hazardous due to their potentials to catch fire easily. It also has negative effect on arable soil especially for farming purpose. Consequently, action should be taken to promote recycling of plastic bottles.

1.2. Statement of problem

Due to rapid urbanization and high rate of consumption, there is a high usage of goods and materials that are packaged using plastics. This results in the availability of high volume of plastic bottle waste which is not easily recyclable due to the absence of basic machines and equipment for processing the waste plastic bottles into reusable form like powder, granules, pellets etc. As a result of the high population estimated of 187,896,647 in Nigeria (Worldometer, 2016), millions of plastic bottles are consumed and discarded every day. The global PET packaging market is worth $48.1 billion in 2014, amounting to almost 16 million tonnes according to a new market report. Demand for PET packaging is expected to increase by an average of 4.6% annually over the next five years, and will amount to 19.9 million tonnes worth $60 billion by 2019. Within overall PET packaging consumption of 15.4 million tonnes in 2013, PET bottles for beverages accounted for over 80% of overall sales at 12.5 million tonnes (up to 3.7% on 2012). In 2013, bottled water became the largest category for PET packaging; sales of PET water bottles grew by 7.3% reaching 5.45 million tones (Allen, 2017). This statistic poses a great environmental risk as a result of the fact that bottles made of polyethylene terephthalate (PET) material is non-biodegradable and can spend millions of years in our environment (Hayden et al., 2013). However, waste management team involved in community recycling program find it cumbersome to store these PET bottles, as they a consume lot of space, and that increases the cost of transporting these bottles to a recycling plant. Hence, these problems have necessitated the design of PET handling bottles machine to crush used PET bottles into shreds available for recycling.

1.3 Aim and objectives of the research

1.3.1 Aim

The aim of this project is to design and fabricate a crushing machine capable of reducing resizing used PET bottles into pellets or flakes

1.3.2 Objectives

The main objectives of this work are as follows;

i. To aid in the recycling process of PET bottles, i.e., to prepare the plastics for pyrolysis.
ii. To fabricate a crushing machine that is cheap, easily available and durable.
iii. To add economic value to PET bottle waste in Nigeria.
iv. To minimize the rate of PET bottles disposal at dumpsites/landfills

1.4 Scope of Research

i. Extensive review of existing literatures on PET bottles crushing technology.
ii. Conceptual design and selection.
iii. Detailed design of selected concept.
iv. Finite element analysis of the crushing blade.
v. Experimental studies to determine the power required to crush PET bottles fed into the machine.
vi. Fabrication of the PET bottles crushing machine.
vii. Testing of fabricated prototype.

1.5 Justification

One of the ways of processing PET bottles involves a thermochemical process known as pyrolysis, which is very expensive to acquire and maintain as well. However, fabrication of a crushing machine that can shred these PET bottles to pellets can help offset the huge cost involved in the PET bottle processing through pyrolysis and manufacturing using virgin materials, which can as well minimize the health and environmental damages. Moreover, the design requires little human effort only in the aspect of loading the PET bottles into the crushing machine.

1.6 Economic importance of the research

i. Environmental: The conversion of plastic bottle wastes into powder will reduce to the barest minimum the hazardous effect of plastic bottles and as well alleviate environmental pollution.
ii. The machine will be affordable to those working in the informal sector.
iii. Less complex and hence easy to operate, bearing in mind the technical ability of those involved in the informal sector.
iv. Cheap to maintain and environmentally friendly.
v. To reduce the menace caused by used plastic bottles.
vi. It will aid in the transformation of plastic bottle wastes into valuable materials.

vi. Economic: Plastic bottle powder made from waste plastic bottles is expected to be of good quality and affordable since the plastic bottle wastes are available in large quantities. This will help in increasing the quantities of raw materials for making plastic bottles and other plastic materials in the industry. The establishment of plastic waste bottles crushing factories will create jobs and reduce unemployment.

1.7 Uses of recycled waste from plastic bottles

The recycled waste plastic bottles are used as follows;

i. To make electrical products bodies and parts as well as video and cassette tapes, CD'S and DVD'S.
ii. To make bumpers, seat cushions, tyres and numerous automobile parts.
iii. To make equipment such as fluid infusion tubes or pipes used for blood transfusion and injection devices such as syringe in the hospitals.
iv. To make containers, benches, chairs, table, building and packaging materials and textile and sheet products.
v. As raw fuel for generating electricity for electrical power stations.
vi. To make tennis racquets and pole used by pole-vaulters in Olympics
vii. It serves as the insulating part for conductor in electrical components.
viii. They are converted to gas for use as a raw material in the chemical industry.
ix. To make floor tiles, raincoats, water pipes, window frames, water hose, gloves and toy balls etc.

CHAPTER TWO

LITERATURE REVIEW

2.1 History of plastic

History has it that, the development of plastics is regarded as one of the major technical achievements of the twentieth century by mankind. Since, the development of plastics, it has been considered as the cheapest material used in place of other materials such as metal, wood and glass. The quest for plastic products in our everyday life necessitated new development to improve the quality and strength of plastic materials. Plastic materials have some unique properties comparable to other materials in terms of forming into any desirable shape, resistance to moisture, resistance to tensile stress etc. (Edward, 1995). The discovery of plastic started long ago. It was in the late 1850s when the first synthetic plastic was made by an English inventor called Alexander Parkesine. This achievement was showcased in 1862 at Great International Exhibition in London. It was named after Parkesine and this organic material was obtained from cellulose. Alexander Parkesine observed that when the material was heated and cooled down it retained its shape. The massive development of the most common thermoplastics used today by manufacturing industries was witnessed greatly in 1930-1934. These common thermoplastics for example are polystyrene, polyvinyl chloride, polyolefins and polymethyl methacrylate. The development of plastics did not cease at that time rather lead to continuous research into plastics till date (Brydson, 1997). Plastics are synthetic or artificial materials made from the used of crude oil and natural gas as the raw material. The raw material contains polymer molecules that are divided into simple individual chemical constituents of a polymer. Plastics consist of several monomers that are linked together in a chain-like form. Plastic material can exist as linear or branched polymers. Plastics are produced by a process of joining one or more monomers such as ethylene, styrene vinyl chloride together and this is called polymerization. In the process of polymerization of polymers such as ethylene, vinyl chloride and styrene lead to polyethylene (PE), polyvinyl chloride(PVC) and polystyrene(PS) (Hans-George, 2003). There are two ways that plastics can be grouped depending on their chemical and physical properties. Plastic can be either thermosets or thermoplastics. With the thermosets, they are plastic that harden by chemical cross-linking reaction involving polymer molecules. The chemical

properties of thermosets break down upon heating and thus weakening of the bonds between the polymers molecules. This weakening of the bonds is irreversible. On the part of thermoplastics, they are softened by heating and harden upon cooling. There are no chemical bonding's between the polymer molecules as in the case of thermosets. Thermoplastics take their shape back when heated and allowed to cool. Thus, the process is reversible. There are several types of plastics being produced by plastics manufacturing companies around the world including the traditional plastics and modified plastics. In the developing countries however, the traditional plastics are manufactured for use. This project work is focused mainly on the following five plastics, PET, PE, PVC, PS and PP. These plastics are used in our daily life in various ways such as food packing, storage containers, food containers etc. Below is a briefly description of each of the above type of plastics according to their properties, process of manufacturing and uses (Briston, 1994).

2.2. Definitions of waste

Waste can be defined as any product or substance that has no further use or value for the person or organization that owns it, and which is, or will be, discarded. But what is discarded by one party may have value for another. Thus, a broad approach to defining 'waste' may include products that are recoverable by others. (A.U. Productivity Commission, 2006). Waste as the term implies is any solid, liquid or gaseous substance or material which could be scrap, refuse or reject, that is disposed off or required to be disposed as unwanted (Adewole, 2009).

2.3. Types of waste

Waste could be in the form of liquid, solid and gaseous.

2.3.1. Solid Waste:

Solid Wastes are the useless and unwanted products in the solid state derived from the activities of industries, household, etc. And discarded by society (Kadafa et al., 2012).

2.3.2. Liquid Waste

Liquid waste includes any waste that is liquid at 20°C regardless of whether or not it is packaged or otherwise contained, and irrespective of whether or not the packaging or container is to be disposed of together with the liquid that it contains (A.U EPA., 2009).

2.3.3. Gaseous Waste

Gaseous waste is a waste product in gas form resulting from various human activities, such as manufacturing, processing, material consumption or biological processes. They are gases which emerge from incomplete combustion or other chemical reactions (European Commission, 2011).

2.4 Sources of solid waste

The various sources of solid waste are shown in Table 2.1.

Table 2.1: Sources of Solid Waste (Ojoawo et al. 2011)

Source	Typical waste Generation	Types of solid waste
Residential	Single and multifamily dwelling.	Food wastes, paper, cardboard, plastics, textiles, Leather, yard waste, wood, glass, metals, ashes, special wastes (e.g., bulky items, consumer electronics, white goods, batteries, oil, tires), and household hazardous wastes (e.g., paints, aerosols, gas tanks, waste containing mercury, motor oil, cleaning agents), e-wastes (e.g., computers, phones, TVs).
Industrial	Light and heavy manufacturing, fabrication, construction sites, power and chemical plants.	Housekeeping waste, packaging food wastes, construction and demolition materials, hazardous wastes, ashes, special wastes.
Commercial	Stores, hotels, restaurants, markets, office buildings.	Paper, cardboards, plastics, wood, food wastes, glass, metals, special wastes, hazardous wastes, e-wastes.
Institutional	Schools, hospitals (non-medical waste), prisons, government buildings, airports.	Same as commercial.
Construction and Demolition	New construction sites, road repair, renovation sites, demolition of buildings.	Wood, steel, concrete, dirt, bricks, tiles.
Municipal services	Street cleaning, landscaping, parks, beaches, other recreational areas, water and wastewater treatment plants.	Street sweeping, landscape and tree trimming, general waste, from parks, beaches, and other recreational areas, sludge.
All of the above should be included as municipal solid waste. Industrial, commercial, and		

institutional (ICI) wastes are often grouped together and usually represent more than 50% of MSW.C&D waste is often treated separately, if well managed it can be disposed separately. THE Items below are usually considered MSW if the municipality oversees their collection and disposal.		
Process	Heavy and light manufacturing, refineries, chemical plants, power plants, mineral extraction and processing.	Industrial process wastes, scrap materials, off-specification products, slag, tailings.
Medical waste	Hospital, nursing, homes, clinics.	Infectious waste (bandages, gloves, cultures, swabs, blood and bloody fluids), hazardous wastes (sharps, instruments, chemicals), radioactive waste from cancer therapies, pharmaceutical waste.
Agricultural	Crops, orchards, vineyards, dairies, feedlots, farms.	Spoiled food waste, agricultural wastes (e.g., rice husks, cotton stalks, coconut shells, coffee waste), hazardous wastes (e.g., pesticides).

2.5 Waste management

Waste management is defined as the collection, transportation, recovery, recycling and disposal of waste, including the supervision of such operations and the after-care of disposal sites, and including actions taken as a dealer or broker (Fisher et al, 2013). In Nigeria, solid waste problem started with the rapid increase in urban growth resulting partly from the increase in population status (Eguniobi, 1996). No town in Nigeria can boast of finding a lasting solution to the problem of filth and huge piles of solid waste, rather the problem continues to assume monstrous dimensions (Okpala, 2002). To urban and city dwellers, public hygiene starts and ends in their immediate surrounding and indeed the city would take

care of itself. The situation has so deteriorated that today the problem of solid waste has become one of the nation's most serious environmental problem (Titus and Anim, 2014). In Nigeria, the commonly practiced waste management option is basically the collection of mixed waste materials and subsequent dumping at designated dumpsites. It is not a practice to separate waste materials at source or any point during its management (Akintokun et al., 2011). A report done by (Igbinomwanhia, 2011) in Oredo LGA of Benin City, reported that waste plastic was seen to occupy 8% of the total municipal solid waste stream as shown in Table 2.2.

Table 2.2: Average component of solid waste generated per person per day in Oredo LGA.

Type of solid wastes	Weight(kg)	% component
Food waste	0.334	78.59
Plastic/Rubber	**0.037**	**8.65**
Paper	0.016	3.67
Metal waste	0.017	4.11
Glass	0.012	2.83
Other waste (Textile, foam, ceramics, ash etc)	0.009	2.10
Total Solid Waste (ppd)	**0.425**	**100**

Source: (Igbinomwanhia, 2011)

2.5.1 Waste Management Hierarchy

The methods in which wastes can be managed are detailed in the waste management hierarchy shown in Figure 2.1.

Figure 2.1: Waste Management Hierarchy (U.S EPA, 2013).

2.5.1.1 Source Reduction and Reuse

Source reduction and reuse, also known as waste prevention, means reducing waste at the source (U.S EPA, 2013). It can take many different forms, including reusing or donating items, buying in bulk, reducing packaging, redesigning products, and reducing toxicity (U.S EPA, 2013). Benefits of source reduction and reuse include;

1. Savings in natural resource.
2. Conservation of energy.
3. Reduction of pollution.
4. Reduction in the toxicity of waste.
5. Savings in money for consumers and businesses alike.

2.5.1.2. Recycling/Composting

Recycling is a series of activities that includes the collection of used, reused, or unused items that would otherwise be considered waste; sorting and processing the recyclable products into raw materials; and remanufacturing the recycled raw materials into new products (U.S EPA, 2013). Recycling prevents the emission of many greenhouse gases and water pollutants, saves energy, supplies valuable raw materials to industries, creates jobs, stimulates the development of greener technologies, conserves resources for our children's future, and reduces the need for new landfills and combustors (U.S EPA, 2013).

2.5.1.3. Energy Recovery

Energy recovery from waste is the conversion of non-recyclable waste materials into usable heat, electricity, or fuel through a variety of processes, including combustion, gasification, pyrolization, anaerobic digestion, and landfill gas (LFG) recovery. This process is often called waste-to-energy (WTE) (U.S EPA, 2013).

2.5.1.4. Treatment and Disposal

Landfills are the most common form of waste disposal. They are important components of an integrated waste management system (U.S EPA, 2013). Landfills that accept municipal solid waste are primarily regulated by state and local governments. Today's landfills must meet stringent design operation, and closure requirements. Methane gas, a by-product of decomposing waste, can be collected and used as fuel to generate electricity e.g. biogas. Plastics are non-biodegradable, and as such, do not support biogas formation. After a landfill is capped, the land may be used for recreation sites such as parks, golf courses, and ski slopes (U.S EPA, 2013).

2.6 Types of plastics

Plastics are divided into two main types according to how they behave when heated: thermoplastic plastics and thermosetting plastics.

2.6.1. Thermoplastic plastics

Thermoplastic plastics undergo strong molecular motion when heated, which causes them to soften. They harden when cooled, and repeated heating and cooling allows them to be molded into a variety of different shapes. Uses include containers and packaging material (film, sheet, and bottles), daily necessities, household appliances and automobiles (PWMI, 2009). Thermoplastics include Polyethylene Terephthalate (PET), Low Density Poly Ethylene (LDPE),

Poly Vinyl Chloride (PVC), High Density Poly Ethylene (HDPE), Polypropylene (PP) and Polystyrene (PS) among others (UNEP, 2009).

2.6.2. Thermosetting Plastics

Thermosetting plastics undergo relatively weak molecular motion, but once softened by heat and treated they undergo a chemical reaction which causes them to form a high molecular weight 3D matrix structure. This means once they are set they cannot be softened again by

heat. Uses include food containers, circuit boards for electrical equipment, shafts for golf clubs and tennis rackets, and fiber-reinforced plastic boats (PWMI, 2009). Thermoset plastics contain alkyde, epoxy, ester, melamine formaldehyde, phenolic formaldehyde, silicon, urea formaldehyde, polyurethane, metalized and multilayer plastics etc. (UNEP, 2009). Plastics are classified on the basis of the polymer from which they are made. The types of plastics that are most commonly reprocessed are polyethylene (PE), polypropylene (PP), polystyrene (PS), polyethylene terephthalate (PET) and polyvinyl chloride (PVC).

2.6.2.1. Polyethylene (PE)

The two main types of polyethylene are low-density polyethylene (LDPE) and high density polyethylene (HDPE). LDPE is soft, flexible and easy to cut, with the feel of candle wax. When it is very thin it is transparent; when thick it is milky white, unless a pigment is added. LDPE is used in the manufacture of film bags, sacks and sheeting, blow-molded bottles, food boxes, flexible piping and hosepipes, household articles such as buckets and bowls, toys, telephone cable sheaths, etc. It is used for bags making and industrial wrappings, soft drinks bottles, detergents and cosmetics containers, toys, crates, jerry cans, dustbins and other household articles (Nya, 2013).

2.6.2.2 Polypropylene (PP)

Polypropylene is more rigid than PE, and can be bent sharply without breaking. It is used for stools and chairs, high-quality home ware, strong moldings such as car battery housings and other parts, domestic appliances, suitcases, wine barrels, crates, pipes, fittings, rope, woven sacking, carPET backing, netting, surgical instruments, nursing bottles, food containers, etc. (UNEP, 2009).

2.6.2.3. Polystyrene (PS)

In its unprocessed form, polystyrene is brittle and usually transparent. It is often blended (copolymerized) with other materials to obtain the desired properties. High impact polystyrene (HIPS) is made by adding rubber. Polystyrene foam is often produced by incorporating a blowing agent during the polymerization process. PS is used for cheap, transparent kitchen ware, light fittings, bottles, toys, food containers, etc. (Inge and Arnold, 1995).

2.6.2.4. Polyethylene Terephthalate (PET)

PET exists as an amorphous (transparent) and as a semi-crystalline (opaque and white) thermoplastic material. Generally, it has good resistance to mineral oils, solvents and acids but not to bases. The semi-crystalline PET has good strength, ductility, stiffness and hardness while the amorphous type has better ductility but less stiffness and hardness. PET has good barrier properties against oxygen and carbon dioxide. Therefore, it is utilized in bottles for mineral water. Other applications include food trays for oven use, roasting bags, audio/video tapes as well as mechanical components and synthetic fibers (Lukkassen and Meidell, 2007).

2.6.2.5. Polyvinyl chloride (PVC)

Polyvinyl chloride is a hard, rigid material, unless plasticizers are added. Common applications for PVC include bottles, thin sheeting, transparent packaging materials, water and irrigation pipes, gutters, window frames, building panels, etc. If plasticizers are added, the product is known as plasticized polyvinyl chloride (PPVC), which is soft, flexible and rather weak, and is used to make inflatable articles such as footballs, as well as hosepipes and cable coverings, shoes, flooring, raincoats, shower curtains, furniture coverings, automobile linings, bottles, etc (Nya, 2013).

Other plastics extensively used in our daily lives are as follow:

1. High Impact Polystyrene (HIPS) – used in fridge liners, food packaging, vending cups.
2. Acrylonitrile butadiene styrene (ABS) – used in electronic equipment cases (e.g., computer monitors, printers, keyboards), drainage pipe.
3. Polyester (PES) – used in fibers, textiles.
4. Polyamides (PA) (Nylons) - used in fibers, toothbrush bristles, fishing line, under the car engine mouldings.
5. Polyurethanes (PU) - used in cushioning foams, thermal insulation foams, surface coatings, printing rollers.
6. Polycarbonates (PC) - used in CDs, eyeglasses, riot shields, security windows, traffic lights, lenses.
7. Polycarbonate/Acrylonitrile Butadiene Styrene (PC/ABS) - A blend of PC and ABS that creates a stronger plastic. It is used in car interior and exterior parts and mobile phone bodies.

2.7. Background on PET

Polyethylene Terephthalate (PET) is a generic part of the plastic group, and plastic is a general term for a wide range of synthetic or semi-synthetic materials used in a vast and growing range of applications. Plastics are usually classified by their chemical structure of the polymer's backbone and side chains. Important groups in these classifications include acrylics, silicones, polyesters, polyurethanes, halogenated plastics. Plastics can be classified by the chemical process that is used in their synthesis (Thakur, 2012). Other classifications are based on qualities that are relevant for manufacturing or product design, e.g., thermos plasticity, biodegradability, electrical conductivity, density, or resistance to various chemical products (IPTS, 2013). Plastics can also be classified by various physical properties, such as density, tensile strength, glass transition temperature, and resistance to various chemical products (Ravi et al., 2014). Due to their relatively low cost, ease of manufacture, versatility, and imperviousness to water, plastics are used in an enormous and expanding range of products, from paper clips to spaceships. They have already displaced many traditional materials, such as wood, stone, paper, glass and ceramic, in most of their former uses (Foltran, 2013). PET bottles were initially used for soft drinks, but gradually their application in bottled water became more popular (EFBW, 2012). PET is manufactured from terephthalic acid (a dicarboxylic acid) and ethylene glycol (a dialcohol). As shown in Figure 2.2, the two substances react with each other to form long polymer chains, with water as by-product.

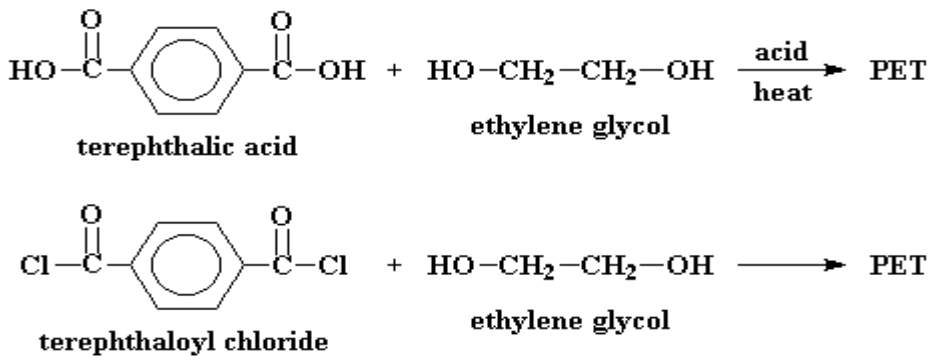

Figure 2.2: Structure and chemical equation of PET (EFBW 2012)

Among the existing forms of plastics, the most easily recycled ones are Polyethylene Terephthalate (PET) and Polyethelene. The most commonly used non-degradable solid waste is polythene (Kavitha et al., 2014).

2.8 Polyethylene terephthalate (PET)

PET is an acronym for polyethylene terephthalate, which is a long-chain polymer belonging to the generic family of polyesters. PET is formed from the intermediates, terephthalic acid (TPA) and ethylene glycol (EG), which are both derived from oil feedstock. There are other polyesters based on different intermediates but all are formed by a polymerization reaction between an acid and an alcohol. PET, in its purest form, is an amorphous glass-like material, when under the influence of direct modifying additives develops crystallinity. Also, crystallinity can be developed by heat treatment of the polymer melt. Originally patented and exploited by DuPont during the search for new fiber-forming polymers, polyester fiber applications have developed to such an extent that PET represents over 50% of world synthetic fiber manufacture. PET is used alone or blended with cotton or wool to impart better wash/wear and crease-resistant properties to textiles (ILSI, 2000). In the late 1950s PET was developed as a film. It was first used for video, photographic and X-ray films in addition to uses in flexible packaging. Later PET was modified for use in injection moulded and extruded articles, primarily reinforced with glass fiber. In the early 1970s PET was stretched by blow moulding techniques which produced the first oriented three-dimensional structures initiating the rapid exploitation of PET as lightweight, tough, unbreakable bottles (ILSI, 2000).

2.8.1 Chemical Properties of PET

Polyethylene terephthalate (PET), is a condensation polymer produced from the monomer's ethylene glycol, HOCH2CH2OH, a dialcohol, and dimethyl terephthalate, $CH_3O_2C–C_6H_4CO_2CH_3$, a diester. By the process of transesterification, these monomers form ester linkages between them, yielding polyester. PET chemical resistance is good for concentrated acids, dilute acids, alcohols, greases and oils, halogens, and ketones. It has a poor chemical resistance for alkalis and a fair one for aromatic hydrocarbons. The chemical structure of PET is shown in Figure 2.3.

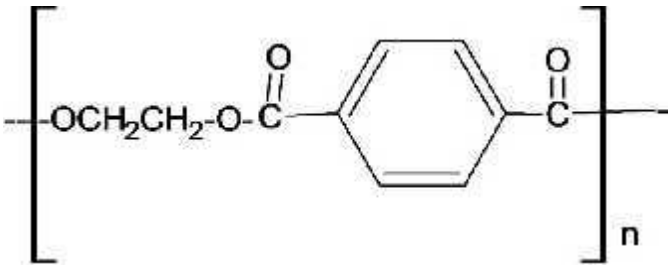

Figure 2.3: Polyethylene Terephthalate (Venkatachalam et al., 2012)

2.8.2 Physical properties of PET

The Physical properties of PET are outlined in Table 2.3

Table 2.3: Physical Properties of Polyethylene Terephthalate (Kamal, 2010)

Properties	Values
Molecular formula	$(C_{10}H_8O_4)n$
Density amorphous	1.370 g/cm^3
Density crystalline	1.455 g/cm^3
Young's modulus	2800-3100 MPa
Tensile strength (σt)	55-75 MPa
Elastic limit	50-150%
Notch test	3.6 KJ/m^2
Glass temperature	75°C
Melting Point	260°C
Vicat B	170°C
Thermal conductivity	0.24 W/(m.K)
Linear expansion coefficient (α)	7×10^{-5}/K
Specific heat (C)	1.0 KJ/(Kg.K)
Water absorption (ASTM)	0.16
Refractive Index	1.5750

2.9. PET bottle waste

PET bottles are preferred or chosen by consumers because it is inexpensive, lightweight, reseal-able, shatter resistant and recyclable among other reasons (NAPCOR, 2011). The consumption of carbonated drinks, beverages and food items packaged in PET bottles is on the increase in Nigeria with a production rate of 200 million per day (Iwere, 2013). According to a sight survey carried out in Benin-city, used plastic bottles (PET) were seen littered in almost every location within the cities. An insignificant quantity of these wastes is recycled either for content different from the original content of the bottle or converted into another product. The remaining un-recycled ones end up on the road, walkways, trash bins or open dumpsites within the city. Figures 2.4 shows site of wastes generated by PET bottles in some selected areas.

Fig. 2.4: Used PET bottles littered in drainage at Uselu Lagos road, Edaiken, Benin City.

2.9.1. Source of PET waste

Sources of PET waste include;

1. Municipal Source: They include residential, markets, commercial establishments and hospitals.

2. Industrial Source: They include food and chemical industries, packing firms, etc.

2.9.2. PET waste management

Polyethylene terephthalate also known as PET is an indispensable material with immense applications owing to its excellent physical and chemical properties (Leian et al., 2012). Due to its increasing consumption and it non-biodegradable nature, PET waste disposal has created serious environmental concerns. The management of PET wastes has been an issue to the society and government in Nigeria. Integrated waste management system can be applied in the management of waste PETs. It is a contemporary concept of waste management which according to Botkin & Keller (1998) is best defined as a set of management alternatives involving reuse, source reduction and recycling. In view of the increasing environmental awareness in the society, recycling remains the most viable option for the treatment of waste PET's in Nigeria. Environmental and economic considerations as well as energy conservation issues support the wide-scale recycling of PET bottles (Nir et al., 1993). A chart shown in Figure 2.5 details a PET waste management system.

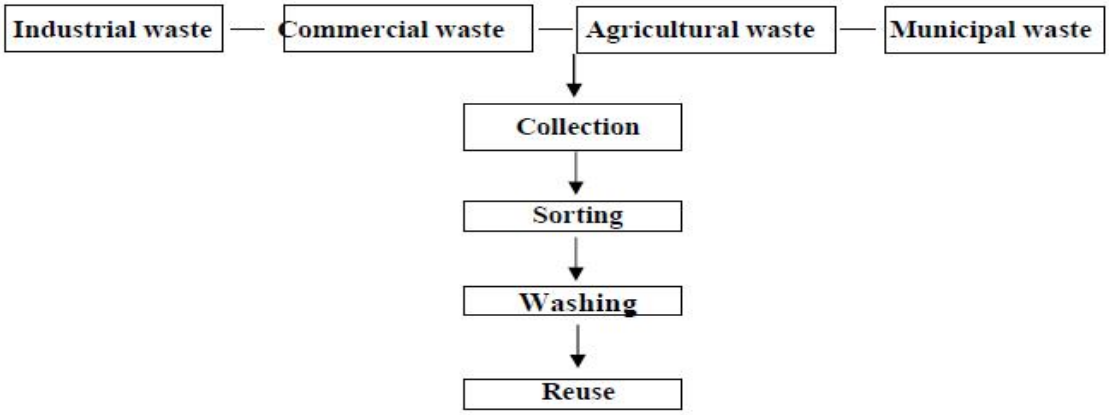

Fig. 2.5: PET Waste Management System

2.10 Types of recycling

Plastic recycling technology has been historically divided into four (4) general categories:

2.10.1. Primary (re-use) recycling

This refers to the 'in-plant' recycling of the scrap material of controlled history (Dimitris et al., 2012). This process remains the most popular as it ensures simplicity and low cost. However only with the recycling of clean uncontaminated waste (Dimitris et al., 2012). Primary recycling involves the secondhand use of a product without changing or altering the product, such as reusing materials yourself, donating to a friend, family member or charity organizations or selling. It is simply to reuse it (Recycling Consortium, 2014).

2.10.2. Mechanical recycling (or secondary recycling)

In this approach, the polymer is separated from its associated contaminants and readily reprocessed into granules by conventional melt extrusion. Mechanical recycling includes the sorting and separation of the wastes, size reduction and melt filtration (Dimitris et al., 2012). The basic polymer is not altered during the process. The main disadvantage of this type of recycling is the deterioration of product properties in every cycle. This occurs because the molecular weight of the recycled resin is reduced due to chain scission reactions caused by the presence of water and trace acidic impurities. Strategies for maintaining the polymer average molecular weight during reprocessing include intensive drying, reprocessing with degassing vacuum, the use of chain extender compounds, etc. (Dimitris et al., 2012).

2.10.3. Tertiary (chemical) recycling

This is defined as the process leading to total depolymerization to monomers, or partial depolymerization to oligomers and other chemical substances. The monomers could subsequently repolymerize to regenerate the original polymer (Dimitris et al., 2012).

2.10.4. Feedstock recycling

Feedstock (chemical) recycling is part of the tertiary recycling process, it involves the transformation of plastic polymers by means of heat and/or chemical agents to yield monomers or other hydrocarbon products that may be used to produce new polymers, refined chemicals, or fuels (Alejandro and Eder, 2014). Feedstock recycling includes; blast furnace feedstock recycling, coke oven chemical feedstock recycling, gasification feedstock recycling, and Liquefaction feedstock recycling.

2.10.5. Background on PET bottle recycling industry

The Society of Plastic Industry (SPI) established a resin identification code in 1987 that contains a number, surrounded by the "chasing arrows" recycling symbol, followed by an abbreviation for the specific plastic it represents. This identification code is imprinted on most plastic packages manufactured to aid in the identification of plastics for recycling. The SPI resin identification code for PET is "#1" (Hurd, 1995). From its beginning, the PET plastic packaging industry has demonstrated its commitment to environmental responsibility through recycling. Prior to the introduction of the PET soft drink bottle on grocery shelves, PET bottle manufacturers and consumer product companies worked with private recycling companies to demonstrate that this new packaging material could be recycled (Hurd, 1995). Reportedly, the first PET bottle recycling process was established by a company called St. Jude Polymers in 1976, they began recycling PET bottles into plastic strapping and paint brush bristles. In 1977, St. Jude became the first to "repalletize" used PET plastic. This was an important step, as many PET remanufacturing companies rely on plastic in pelletized form for their processes, increasing the variety of products that can be made from recycled, used PET plastic (Hurd, 1995). However, a major push in the development of both the demand and the capacity for used PET recycling occurred when a major plastic fiber manufacturer named Wellman, Inc., entered the picture. As early as 1978, Wellman began recycling PET bottles into a fiber product that was suitable for both carpet and fiberfill applications. Wellman continued to increase its use of recycled PET and throughout the 1980s and early 1990s increased their processing capacity and consequently the market demand for post-consumer

PET. The major event in Wellman's development of post-consumer PET processing capacity was the vertical integration of the recycled PET it processed into its own product lines. Today, St. Jude and Wellman are joined by more than a dozen other companies, whose combined PET recycling processing capacity produces over 1/2 billion pounds of recycled PET resin annually in the U.S (Hurd, 1995). With recent advances in PET recycling technology, it is now possible to "close the loop," by recycling bottles and containers back into bottles and containers, even in some food-contact packaging applications. The Federal Food and Drug Administration (FDA, US) has issued "letters of non-objection" for the use of post-consumer PET in a number of food-contact packaging applications. This has greatly increased the demand for recycled PET plastic and the ability to produce new PET packages from 100%, post-consumer recycled PET plastic (Hurd, 1995). When recycling polyethylene terephthalate (PET), two ways generally have to be differentiated;

1. The chemical recycling back to the initial raw materials purified terephthalic acid (PTA) or dimethyl terephthalate (DMT) and ethylene glycol (EG) where the polymer structure is destroyed completely, or in process intermediates like bis-ß-hydroxyterephthalate.
2. The mechanical recycling where the original polymer properties are being maintained or reconstituted.

When talking about PET recycling industry for this project work, we are concentrating mainly on the reuse of PET bottles which are mostly used for all kinds of liquid packaging like water, carbonated soft drinks, juices, beer, sauces, detergents, household chemicals and so on. Bottles are easy to distinguish because of shape and consistency; they are easily separated from waste plastic streams either by automatic or hand sorting processes. An established PET recycling industry exists of three major sections:

1. PET bottle collection and waste separation (waste logistics).
2. Production of clean bottle flakes (flake production).
3. Conversion of PET flakes to final products (flake processing).

Waste logistics involves the collection and sorting of waste PET bottles and separation of coloured PET bottles from the un-coloured bottles. Flake production involves washing, drying and shredding of sorted PET bottles. Flake processing involves the melting of the shredded PET bottles called Flakes into pellets which can be re-processed to form the initial PET bottle or any other product of choice (Hurd, 1995). The recycling of PET bottle is a process chain involving;

2.11. Collection

There are four basic ways in which communities around the world offer recycling collection services for PET plastic bottles and containers in addition, to other recyclable materials. The first method is not up to individual communities, but is created as a result of statewide laws known as Returnable Container Legislation, or "Bottle Bills." Many states around the United States have passed such legislation, which establishes a redemption value on carbonated beverage (and, in some cases, non-carbonated beverage) containers. These containers, when returned by the consumer for the redemption value, facilitate recycling by aggregating large quantities of recyclable materials at beverage retailers and wholesalers to be collected by recyclers, while simultaneously providing the consumer with an economic incentive to return soft drink containers for recycling (Hurd, 1995). The second, and most widely accessible, collection method is curbside collection of recyclables. Curbside recycling programs are generally the most convenient for community residents to participate in and yield high recovery rates as a result. In the United States, research conducted by the Center for Plastics Recycling Research at Rutgers University estimates that curbside collection gathers 70% - 90% of available recyclables (Hurd, 1995). Communities that provide curbside collection generally request residents to separate designated recyclables from their household garbage and to place them into special receptacles or bags, which are then set out at the curb for collection by municipal or municipally-contracted crews. The third collection method is known as drop-off recycling. In this method, containers for designated recyclable materials are placed at central collection locations throughout the community, such as parking lots, churches, or other civic centres. The containers are generally marked as to which recyclable material should be placed in them. Residents are requested to deliver their recyclables to the drop-off location, where recyclables are separated by material type into their respective collection containers (Hurd, 1995).

The last collection method employs the use of buy-back centers. Buy-back recycling centers are operated by private companies; they often provide incentives, through legislation or grants and loan programs, which can assist in the establishment of buy-back centers for their residents. Buy-back centers pay consumers for recyclable materials that are brought to them (Hurd, 1995).

PET plastic wastes are collected in the following ways:

1. Private Collection: This type of collection is done in restaurants, hotels, business establishments, supermarkets and fast-food chains.

2. Household Consumer: The household consumers segregate and sell their plastic waste to scavenger. However, some of them dispose their co-mingled solid waste to garbage bins or containers for pick- up by dump trucks or garbage collectors.

3. Junk Shops: There are many junk shops collecting recyclable items and separate them. They buy from scavengers and household consumers and sell their scrap to their cyclers/processors.

4. Middleman: The middleman or consolidators operates in the following ways:

a. Collects and grinds PET industrial waste "on-site".

b. Collects and grinds PET industrial and post-consumer waste in their own plant.

c. Collects PET industrial/consumer waste and sell them to PET recyclers.

2.12. Sorting

Plastics sorting operations may be carried out manually or automatically using appropriate means of identification. The more accurate and efficient the means of identification, sorting and separation, the better is the quality of the recovered product obtained. The raw material obtained by hand sorting is of high quality and offers an excellent basis for producing high quality products by small and medium scale industries (Ing. Heino, 2000).

2.13. Shredding

Shredding is suitable for smaller pieces. A typical shredder has a series of rotating blades driven by an electric motor, some form of grid for size grading and a collection bin. Bottles are fed into the shredder via a hopper which is above the blade rotor. The product of shredding is a pile of coarse irregularly shaped plastic flakes which can then be further processed (Klundert, 1995; Brandup, 1996).

Figure 2.6: Typical Shredded Plastic Particle

2.14. Washing

The main cleaning steps are:

a. Draining of remaining fluids from containers into prepared collection barrels.

b. Removing of seal cap, seal ring and label.

c. Intensive washing in cold or hot water with addition of detergents or caustic soda.

2.15. Pelletizing

For many purposes it is recommended to convert plastic flakes or agglomerate (crumbs) into pellets before processing. The plastic pieces are fed into the extruder; they are heated and then forced through a die to form plastic spaghetti which can then be cooled in a water bath before being chopped into pellets. Further processing involves extrusion, injection moulding, blow moulding, and filming moulding.

2.16. PET Bottle Recycling Industry in Nigeria

As observed, PET bottle recycling industries in Nigeria are involved in the recycling of used PET bottles into new bottles or into a different plastic product. However, the recycling industry is at low ebb, as a result of some logistical constraints (power being a major part) due to the epileptic power supply experienced in the country and the high rate of energy consumed in the recycling process of used PET bottles. The industry has experienced drawbacks, and this has affected the recycling of waste PET bottles littered on our streets and cities in Nigeria. An alternative approach to the recycling of used PET bottles is through reuse. PET bottles have been approved for both single and repeated use by the Food and Drug Administration (FDA) in the US and other regulatory agencies (PETRA, 2012). It is a common misconception that refilling or reusing a PET bottle will somehow cause the bottle

to degrade or to release harmful substances. PET is a stable, inert material that does not biologically or chemically degrade with use, and is resistant to attack by micro-organisms. Regulatory authorities have tested PET bottles and found no harmful substances in either new or re-used PET bottles (PETRA, 2012). PET beverage bottles sold in the United States are designed for single use for economic and cultural reasons, not because of any safety concerns with PET (American Chemistry Council, 2010). In fact, refillable bottles made with the same PET resin as single-use bottles are safely reused in a number of other countries. The only difference is that refillable bottles have thicker sidewalls to enable them withstand the mechanical forces involved with industrial collection and commercial cleaning and refilling operations (American Chemistry Council, 2010). The reuse of PET bottles will help reduce waste at source, and the energy and resource consumed in mechanical recycling.

A PET bottle can be reused several times according to the Food and Drug Administration in the US, but it cycles of re-use cannot be estimated because it depends on the consumers' care. These bottles are light weight and fragile and can be dented and cracked making them visually not good to be reused. It is important that consumers be informed on the re-use of these bottles, so it can be handled with care the same way glass bottles are handled, and returned for another cycle of reuse after its content is consumed. So, rather than dispose off used PET bottles, it is important that they are reused the same way glass bottles like soda, beer etc. are reused. In other to better achieve this, it is important that a recollection frame work be designed to retrieve used PET bottles from consumers, so that it can be processed for refill.

2.16.1 Injection moulding

Injection moulding process is one of the most important manufacturing processes in plastics industry. It is used to produce wide range of products from simple to complex plastic products by heating plastic granules to soften or melt. The granules are put in a barrel and then forced out into a mould under high pressure. Injection moulding machine is the equipment used in injection moulding and it is comprised of several units that aid in the whole operations. The units of the injection moulding machine comprise of the injection unit, clamping unit, control system, tempering devices for the mould and mould cavity which is usually made from steel or aluminium (Hanser, 2008**).** The operation of the injection moulding machine involves the plastic granules (raw materials) been put into the machine through the hopper as shown in Figure 2.1. Depending on the type of injection moulding machine, it normally consists of a cylinder barrel equipped with external heaters and the screw (single or double). The screw(s) is driven by a motor that rotates it. The molten granules travel along the length of the screw(s) to the end or tip of the screw(s) inside the barrel by the rotation of the screw(s) which results in tearing or shearing action on the plastic granules to melt. As the screw(s) continue(s) to rotates, thus the volume of molten granules increases at the tip of the screw(s) causes high pressure build up. This high pressure aids the

screw(s) to push forward to force or inject the molten plastics into mould cavity through injection nozzle. The molten plastics take the shape of the cavity as the pressure is maintained for the product to solidify and then the mould is opened to remove the final product. (Briston, 1994). With injection moulding process, both thermoplastics and thermosets materials are used in manufacturing various products, but mostly thermoplastic materials such as polystyrene, polypropylene, polyethylene are used. The process is simple, fast and does not need any further post moulding process. Products made from this manufacturing process include; litter bins, bottles caps/lids, washing bowls, phone cases, drinking cups, electrical appliances case, DVDs/ CDs ,plastic chairs, plastic buckets etc.

2.16.2. Extrusion moulding process

In plastic manufacturing process, extrusion is a process that involves continuous drawing, forcing or pushing the molten plastics in a heated barrel through one or more dies by the turning screw aided with pressure to produce the required shape. The extruded product is cooled with the help of either air or water in a drum, to solidify and then cut into units. The extruded end product could be solid or hollow form such as pipes, plastic profiles, plastic films and sheets. (Briston, 1994). A single screw extruder is shown in Figure 2.2, it comprises one or more screws, barrel or cylinder. The extruder machine operates on the working principles of injection moulding machine discussed earlier. Extrusion process is the best plastic manufacturing process used in turning recycled plastic flakes into pellets for making other plastic products (Akintokun et al., 2012).

2.16.3. Blow moulding

Blow moulding process is an engineering process used in manufacturing hollow products such as bottles which uses air in the process. In blow moulding process, the molten plastic (parison) is extruded through a die into open mould and the mould is then closed around the extrudate (parison). As the parison is securely placed inside the mould, air is then injected into the parison through a design hole in the mould to expand or stretch the parison to take the shape of the cavity of the mould. The shape formed in the mould is then allowed to solidify and the mould opens into two halves to eject the final product out of the mould. In blow moulding process, parison can be formed by injection moulding process and extrusion moulding process.

2.16.4. Injection blow moulding

From Figure 2.3, the molten plastic (parison) is first injected into a mould with two halves closed together having a cavity. The injected parison is formed around a blow core rod in a heated preform mould. The formed parison with a hollow formed neck is transferred to a blow mould while still in a semi-solid state. In the blow mould, a pressurized air is injected through a hole in the blow rod to expand the parison to take the shape of the cavity of the mould. After the parison had taken the shape, it cools by the walls of the mould to solidify and the mould is opened to remove the product.

2.16.5. Extrusion blow moulding

Extrusion blow moulding process is also used in the production of hollow plastic objects or parts. It uses the extruder machine in the process of forming the parison. The molten plastic is extruded in the form of a tube to a certain length downwards between the two halves of an open mould. After the extrusion is done, the mould is closed to trap and seal the parison inside the mould. At this stage, compressed air is introduced to the parison through a blow pin to inflate the parison to cause the expansion of the parison to take the shape of the mould cavity. After the product has cooled and solidified in the mould, the mould is opened to eject the product.

2.17. Hazard of plastic wastes

The plastic waste is one of the wastes that have negative impact on the environment. The waste affects the three major environmental factors (air, land and water) in a number of ways.

2.17.1 Land

Plastic wastes can litter the land and can as well find their way into blocking of gutters and drains. The blocking of gutters and drains by plastic wastes cause flooding whenever it rains, because the rain water cannot get access to flow and the stagnation of the rain water created by plastic wastes provide breeding place for mosquitoes, which later cause malaria to people. Animals are also affected such as goats, sheep, cows, fowls etc. Again, when plastic wastes litter the farm lands, they entangle the crops preventing them from growing and also the plastic waste covers the top soil preventing air penetration into the soil, thus, killing the soil organisms that helps in decomposition of organic matter to fertilize the farmlands.

2.17.2 Water

Plastic wastes find their way into water bodies, thus polluting the water. The waste floats on the surface of water bodies, thus preventing direct sunlight from reaching water organisms. Aquatic animals are killed by plastic wastes that find their way into water bodies as they are mistakenly consumed as food. Since plastic are indigestive materials, they remain inside the digestive track of these animals causing them pains which sometime leads to their death. After the decay of the animal, the ingested plastic is released to the environment to continue causing more harm.

2.17.3 Air

Plastic wastes are non-biodegradable substances and made of toxic chemicals that pollute the air. Poisonous substances such as toxins are released to the air when plastic wastes are burned. When the polluted air is inhaled by those in the environment, it causes respiratory problems and cancer. Smoke that comes out as a result of burning the solid wastes including plastic produces carbon monoxide (CO), carbon dioxide (CO2), and so on which affect the environment generally (Selinger et al, 1986).

2.18. Methods of recycling plastic waste bottles

The recycling of plastic wastes simply means turning the plastic wastes into meaningful use instead of becoming a problem to the environment. As plastic wastes have become environmental problem that affect developing and developed countries. There is the need to design and develop cost effective and efficient methods of recycling the plastic waste bottles in order to improve the environment and create employment. The plastic waste bottles could be recycled through mechanical recycling, chemical or feed-stock recycling and energy recovering (Tukker, 2002).

2.18.1. Mechanical Recycling

Mechanical recycling is regarded as the best technology for recycling of conventional plastic waste bottles into new raw materials without the basic structure been changed. The mechanical recycling involves crushing, washing and sorting operations and it is used for all types of plastic waste bottles. The collected, sorted and clean plastic waste bottles are put in the shredder or chipper to be grind into smaller pieces or flakes. The flakes are then fed to the extruder machine through the hopper. When the flakes are melted in the heated barrel and forced out through a die by the rotation of the screw, the melted flakes come out as hot

strands and passes through water to cool. They are then cut into pellets or granules by the cutter. The finished products (recycled granules) are put into bags for prospective buyers or plastics manufacturing companies. The mechanical way of recycling plastic waste bottles is quite simple to employ in Nigeria, since the mechanism is easy.

2.18.2. Feedstock or chemical recycling

Here the plastic waste bottles are broken down into smaller chemical form by chemical process and reused to produce raw material for manufacturing plastic products or different kinds of products (PWMI, 2004). The feedstock recycling is done by decomposition of the plastic waste bottles aided by the application of heat, chemical agents and other catalysts in order to turn the plastic waste bottles into a source of hydrocarbon chemicals or fuels [Tukker, 2002]**.** In feedstock feeding, only specific plastic waste materials are used in this process such as PET, nylon etc. It has limitation of not recycling mixed plastic waste bottles but only separate plastic waste. There are several separation methods that need to be carried out in order to completely recycle the plastic waste bottles by feedstock recycling. The separation methods must be followed systemically and these are gasification, thermal treatment, hydrogenation, catalytic cracking and chemical depolymerization (Aguado et al, 1999).

2.18.3. Incineration of plastic wastes

Plastics are made from crude oil and since crude oil contains hydrocarbons which have high combustion rate resulting in production of energy for work output. Incineration is the burning of wastes under controlled conditions. So combustion of plastic wastes bottles produces heat energy used to generate power for other works. It is important to note that though it produces energy, it has environment effect if not properly controlled since it produces smoke and ashes which are harmful to living organisms.

Of all these waste plastic recycling methods, this project is specifically centered on the crushing of waste plastic bottles which is one of the processes involved in the mechanical recycling method.

2.19. What are crushers

Crushers are machines designed to reduce large particles such as PET Bottles waste into smaller particles. A crusher may be used to reduce the size, or change the form, of waste materials so that it can be easily disposed or recycled. Crushing devices hold materials

between two parallel or tangent solid surfaces, and apply sufficient force to bring the surfaces together to generate enough energy within the material being crushed so that its molecules separate (fracturing), or change alignment in relation to each other. The earliest crushers were hand-held stones, where the weight of the stone provided a boost to muscle power, used against a stone anvil. Querns and mortars are types of these crushing devices. In industry, crushers are machines which use a metal surface to break or compress materials. In operation, the raw material (such as PET Bottles waste) is usually delivered to the primary crusher's hopper. It often contains a preliminary screening device which allows smaller material to bypass the crusher itself, thus improving efficiency. Primary crushing reduces the large pieces to a size which can be handled by the downstream machinery.

2.19.1. Jaw crusher

A jaw crusher uses compressive force for crushing plastic materials. This mechanical pressure is achieved by the two jaws of the crusher of which one is fixed while the other reciprocates. A jaw or toggle crusher consists of a set of vertical jaws, one jaw is kept stationary and is called as fixed jaw while the other jaw, known as swing jaw, moves back and forth relative to it, by a cam or pitman mechanism, acting like a class II lever or a nutcracker. The volume or cavity between the two jaws is known as the crushing chamber. The movement of the swing jaw can be quite small, since complete crushing is not performed in one stroke. The inertia required to crush the material is provided by a weighted flywheel that moves a shaft creating an eccentric motion that closes the gap. Jaw crushers are heavy duty machines and hence need to be robustly constructed. The outer frame is generally made of cast iron or steel. The jaws themselves are usually constructed from cast steel. They are fitted with replaceable liners which are made of manganese steel, or Ni-hard (a Ni-Cr alloyed cast iron). Jaw crushers are usually constructed in sections to ease the process transportation if they are to be taken underground for carrying out the operations.

Jaw crushers are classified on the basis of the position of the pivoting of the swing jaw and it include:

i. Blake crusher-the swing jaw is fixed at the upper position

ii. Dodge crusher-the swing jaw is fixed at the lower position

iii. Universal crusher-the swing jaw is fixed at an intermediate position

iv. The Blake crusher was patented by Eli Whitney Blake in 1858. The Blake type jaw crusher has a fixed feed area and a variable discharge area. Blake crushers are of two types- single toggle and double toggle jaw crushers.

v. In the single toggle jaw crushers, the swing jaw is suspended on the eccentric shaft which leads to a much more compact design than that of the double toggle jaw crusher. The swing jaw, suspended on the eccentric, undergoes two types of motion- swing motion towards the fixed jaw due to the action of toggle plate and vertical movement due the rotation of the eccentric. These both motions, when combined, lead to an elliptical jaw motion. This motion is useful as it assists in pushing the particles through the crushing chamber. This phenomenon leads to higher capacity of the single toggle jaw crushers but it also results in higher wear of the crushing jaws. These type of jaw crushers are preferred for the crushing of softer particles.

vi. In the double toggle jaw crushers, the oscillating motion of the swing jaw is caused by the vertical motion of the pitman. The pitman moves up and down. The swing jaw closes, i.e., it moves towards the fixed jaw when the pitman moves upward and opens during the downward motion of the pitman. This type is commonly used in mines due to its ability to crush tough and abrasive materials. In the Dodge type jaw crushers, the jaws are farther apart at the top than at the bottom, forming a tapered chute so that the material is crushed progressively smaller and smaller as it travels downward until it is small enough to escape from the bottom opening. The Dodge jaw crusher has a variable feed area and a fixed discharge area which leads to choking of the crusher and hence is used only for laboratory purposes and not for heavy duty operations.

2.19.2. Gyratory crusher

A gyratory crusher is similar in basic concept to a jaw crusher, consisting of a concave surface and a conical head; both surfaces are typically lined with manganese steel surfaces. The inner cone has a slight circular movement, but does not rotate; the movement is generated by an eccentric arrangement. As with the jaw crusher, material travels downward between the two surfaces being progressively crushed until it is small enough to fall out through the gap between the two surfaces. A gyratory crusher is one of the main types of primary crushers in a mine or plastic processing plant. Gyratory crushers are designated in

size either by the gape and mantle diameter or by the size of the receiving opening. Gyratory crushers can be used for primary or secondary crushing. The crushing action is caused by the closing of the gap between the mantle line (movable) mounted on the central vertical spindle and the concave liners (fixed) mounted on the main frame of the crusher. The gap is opened and closed by an eccentric on the bottom of the spindle that causes the central vertical spindle to gyrate. The vertical spindle is free to rotate around its own axis. The crusher illustrated is a short-shaft suspended spindle type, meaning that the main shaft is suspended at the top and that the eccentric is mounted above the gear. The short-shaft design has superseded the long-shaft design in which the eccentric mounted below the gear.

2.19.3. Cone crusher

A cone crusher is similar in operation to a gyratory crusher, with less steepness in the crushing chamber and more of a parallel zone between crushing zones. A cone crusher crushes plastic by squeezing the plastic between an eccentrically gyrating spindle, which is covered by a wear resistant mantle, and the enclosing concave hopper, covered by a manganese concave or a bowl liner. As plastic enters the top of the cone crusher, it becomes wedged and squeezed between the mantle and the bowl liner or concave. Large pieces of plastic are crushed once, and then fall to a lower position (because they are now smaller) where they are crushed again. This process continues until the pieces are small enough to fall through the narrow opening at the bottom of the crusher. It has the advantage of reliable construction, high productivity, easy adjustment and lower operational costs. The spring release system of a cone crusher acts an overload protection that allows tramp to pass through the crushing chamber without damage to the crusher.

2.19.4 Impact crusher

Impact crushers involve the use of impact rather than pressure to crush material. The material is contained within a cage, with openings on the bottom, end, or side of the desired size to allow pulverized material to escape. There are two types of impact crushers: horizontal shaft impactor and vertical shaft impactor. Horizontal shaft impactor (HSI) / Hammer mill. The HSI crushers crush by impacting the plastic with hammers that are fixed upon the outer edge of a spinning rotor. HSI machines are sold in Stationary, trailer mounted and crawler mounted configurations. HSI's are used in recycling, hard and soft plastic materials. In earlier years the practical use of HSI crushers was limited to soft materials and non-abrasive

materials, such as limestone, phosphate, gypsum, weathered shales, however improvements in metallurgy has changed the application of these machines.

2.20. Mineral sizer

The basic concept of the mineral sizer is the use of two rotors with large teeth, on small diameter shafts, driven at a low speed by a direct high torque drive system. This design involves three major principles which all interact when crushing materials using sizer technology. The unique principles are the three-stage crushing action, the rotating screen effect, and the deep scroll tooth pattern.

The three-stage breaking action: initially, the material is gripped by the leading faces of opposed rotor teeth. These subject the plastic to multiple point loading, inducing stress into the material to exploit any natural weaknesses. At the second stage, material is crushed in tension by being subjected to a three-point loading, applied between the front tooth faces on one rotor, and rear tooth faces on the other rotor. Any plastic materials that still remain oversize are crushed as the rotors chop through the fixed teeth of the crusher bar, thereby achieving a three-dimensional controlled product size. The rotating screen effect: The interlaced toothed rotor design allows free flowing undersize material to pass through the continuously changing gaps generated by the relatively slow-moving shafts. The deep scroll tooth pattern: The deep scroll conveys the larger material to one end of the machine and helps to spread the feed across the full length of the rotors.

2.21. Expected particle size from plastic bottle crushing

Crushing, in engineering, is the process of breaking pieces of hard material to reduce their size. The pieces are broken by external forces that overcome the forces of cohesion among the particles of the material. Crushing does not differ in principle from grinding, but it is arbitrarily considered that crushing yields products larger than 5 mm and grinding yields products smaller than 5 mm. Crushing can be accomplished by pressure, splitting, abrasion, or striking. Firm and abrasive materials are crushed mostly by pressure; firm and viscous materials, by pressure combined with abrasion; soft and brittle materials, by splitting and striking (GSE, 1979). The work in crushing is expended on the deformation of the piece of material and the formation of a new surface of small pieces. A large part of the energy expended is dispersed in the form of heat, and only a small part is converted into the free surface energy of the solid. The total work of crushing is equal to the sum of the work of deformation and the formation of new surfaces. For approximate calculations it is assumed

that the work required to crush a piece of size D at a given degree of crushing is directly proportional to D2.5 (Rebinder, 1944). Crushing is described by the degree of crushing—that is, by the ratio of sizes of the largest pieces of material before and after crushing. Another index is the unit expenditure of energy—the kilowatt-hours (kW-hr) per ton of crushed material. Crushing is usually combined with screening. A distinction is made between open and closed crushing cycles. In the first case the product, which has already been sized, is screened off before entering the crusher and is recovered after crushing; in the second case, the material is screened after crushing into small pieces (the finished product) and large pieces, and the large pieces are run through the same crusher again. Several steps (stages) are used in sequence in order to produce a high degree of crushing. In ore enrichment, two, three, or four stages of crushing are used, and the unit expenditure of energy to crush pieces of material 900-1,200 mm in size into pieces 25 mm in size is 1.5-3.0 kW-hr per ton of ore. Hand crushing and fire crushing were known 3,000 years before the Common Era. The simplest devices-falling pestles driven by a waterwheel—were used as early as the Middle Ages and were described by G. Agricola. Machine crushing began to develop in the early 19th century. Hydro explosive, thermal, electrothermal, and other means of crushing have been under study since the 1950's in the USSR and other countries; however, the mechanical processes described above will be the main ones used in the next several decades. Crushing is used in the mining, metallurgical, chemical, and food industries, in construction, and in agriculture.

CHAPTER THREE

RESEARCH METHODOLOGY

3.1 Theory of mechanical crushing of waste plastic bottles

The mechanism of mechanical crushing is described as the application of force amplified by mechanical advantage through a material made of molecule that bond together more strongly and resists deformation more than those in the material being crushed. The force is used to reduce the size or change the form of waste plastic bottle so they may be more easily disposed off or recycled. Crushing devices hold materials between two parallel or tangent solid surfaces and apply sufficient force to bring the surfaces together to generate enough energy within the materials being crushed so that its molecules separate or change alignment in relation to each other.

3.2 Description of crushing

During crushing volume reduction is attained by using a combination of cutters. Below are the frequent forms of crushing.

1. Crushing by means of stationary blade and moving blades.
2. Crushing by means of two discs whose surfaces are lined with manganese steel cutters.

3.3 Feasibility studies on used PET bottles

A random spot survey was carried out within University of Benin, Ugbowo campus, Benin-City, Edo State. The results obtained showed that more than 2,000 PET bottles plastic waste (Figure 3.1) was collected within a period of one week. Also, a random solid waste characterization was carried out in Oredo Local government area (LGA) of Edo State (Figure 4.1). The purpose of the characterization was to know the quantity of plastic solid waste generated daily per household and per person of which plastic bottle constitute large percentage of it. Also, the machine is expected to crush plastics outside waste plastic bottle can. Characterization will equally help in sizing of the plastic waste crushing machine since the volume of plastic solid waste generated will determine the size of the machine required for the purpose of crushing it via recycling processes.

Figure 3.1: Collected PET plastic waste bottle within University of Benin environment

3.4 Preliminary design/test

The preliminary design bridges the gap between the design concept and the detail design phase. There is the need for preliminary test for one to come out with the best concept, thus, detail design and fabrication. Preliminary tests were carried-out for better design to achieve.

3.5. Basic component of the machine

The machine will have the following component:

3.5.1. Main Frame

The main frame was constructed with angle bar. The angle bars are welded together to form the frame work. The welding provides very rigid joints and this is in line with modern trend of providing rigid frames as support. This provides the strength and rigidity for the overall machine.

3.5.2 The Hopper

The hopper is the receptacle through which waste plastic PET bottle is admitted into the machine for crushing. It has a composite shape having an inclined hollow cuboid on a vertical cuboid with a gate at the entry to prevent exit of bottles during operation.

3.5.3 The crushing unit

This unit consists of the shaft, crushing blade, bearings. The crushing blade is made with mild steel and attached to the shaft.

3.5.4 Electric Motor and Pulley System

An electric motor is used to power the machine. A reduction pulley system is used to transmit power to the crushing unit at reduced speed and increased torque. This enables the shaft and crushing blade to exhibit rotary motion thereby crushing the PET bottles waste.

3.5.5 The discharge unit

This is a continuation of the grater's frame connected to the hopper. It directs the flow of crushed PET bottle plastic waste.

3.5.6 Shafts Design

A shaft is a rotating machine element which is used to transmit power from one point to another. The power is transmitted by some tangential force and the resultant torque (or twisting moment) set up within the shafts permits the power to transferred various machine elements connected to the shaft. In order to transfer the power from the shaft, the various members such as pulleys, bearings etc. are mounted on it. These members along with the

force exerted upon them causes the shaft to either turn or twist and bend. However, the shaft in this case is expected to undergo bending (BM) and shearing (SF).

3.5.7 Bearings

Bearings are precision design used to support the shaft and permit relative motion between the contact surfaces of the members while carrying load.

3.5.8 Speed Reducers

The function of speed reducers is as follow:

1. To deliver the power at lower speed to the presser mechanism.
2. To transmit power through the machine element that reduces the rotational speed.
3. To receive power from the input source (engine) through a rotating shaft.

3.5.9 Fasteners

These are temporary or detachable fastening (bolts, nuts, keys screws, etc.). They are employed for joints and their main function is to make a connection that will ensure strength and tightness.

3.5.10 Base Support

The base support is constructed from angle plate and has been employed for a defined dual function. First, it provides the base seating for all the machines accessories or entire assembly and it also provide a link through which machine can be bolted to the foundation floor through the use of bolts and nuts in the slot thereby providing effective rigidity and mounting.

3.6. Design requirement or functional requirement

Establishing design requirements is one of the most important elements in the design process and this task is normally performed at the same time as the feasibility analysis. The design requirements control the design of the project throughout the design process. The following design requirements were drawn:

1. Estimation of power required by the crushing machine (watts)
2. Determination of approximate length of the belt (m)
3. Determination of load on shaft pulley and belt tensions (N)
4. Determination of speed of driver and driven pulley

5. Determination of torque transmitted by electric motor
6. Determination of bending moment
7. Determination of shear force
8. Determination of force require to crush the PET bottle waste
9. Selection of bearing for shaft

3.7 Design consideration

The design considerations phase is where you make a list of factors that need to be considered in broad terms. To achieve optimum function for this machine, proper considerations were made to specify and identify some problems which hinder effective performance as in the former machines and effort was put to identify the factors and constraints as put together below.

1. Functionality
2. Reliability
3. Durability
4. Materials and labour use
5. Simplicity
6. Portability and space
7. Operational procedure
8. Power supplier
9. Usability
10. Maintenance
11. Cost
12. Safety

3.8. Design concepts

Various design concepts were put forward bearing in mind the following design criteria for material selection for various components of the machine which is based on the type of force that will be acting on them, the work they are expected to perform, the environmental condition in which they will function, their useful physical and mechanical properties the cost, toxicity of materials and their availability in the local market or the environment.

3.8.1. Concept one (Simple Crank Mechanism)

This concept, as the name implies uses a simple crank mechanism to perform its crushing action. The slider Crank mechanism finds its applications in many aspects of engineering. The mechanism generally consists of a crank wheel connected to a connecting rod which usually terminates in a sliding piston. The crank is usually connected to the source of power, while the connecting rod converts the rotary motion of the crank to reciprocating motion which is transferred to the piston where work is done. This is the prevailing mechanism in motor vehicles and reciprocating compressors. The design of a waste plastic bottle crushing machine includes the determination of the volume of the hopper unit and the force that could crush the plastic bottles and the selection of a convenient material for the construction of the individual units. The bulk of the parts of the machine were fabricated using mild steel, this is because it is easy to join among all other metals. Above all, it is a very versatile metal, necessitating its use by many industries for fabrication or process unit equipment. Apart from its versatility, it is also very cheap and readily available to other metals. Figure 3.2 shows isometric skeletal view of design concept one

Figure 3.2: Isometric view of **a** Simple Crank Mechanism

3.8.1.1Working Mechanism

The machine comprises of a motor at the base and a table with the hopper on the opposite end. Compressed or flattened bottles are loaded through a hopper. The power is generated by a motor at the base of the machine and thus is transmitted to the blade shaft through a belt to the pulley located at the blade shaft. The crank is attached to the pulley through the crank pin. A connecting rod leads from the crank pin through the side into the base of the hopper. The end of the arm ends in a blade which slides in the hopper thus carrying out the shredding action. The crushing compartment is separated from the collection unit by a mesh which helps to control the size of the pellets at the output of the machine. The large size particles remain in the crushing compartment for crushing.

3.8.2. Design concept two (Rotary blade against a fixed blade)

This mechanism uses the action of a rotational blade against a fixed blade in the hopper to crush bottles rather than the reciprocating action of the slider crank. The machine consists of a hopper and a frame made from angle bars. The hopper is mounted directly over the blades and the crushing compartment. They are secured to the frame by bolts and nuts. The rotary blade which is fixed to a shaft is designed with 201 Annealed Stainless Steel (SS). The collector unit consist of a perforated curved plate to act as mesh for size control. During crushing action, the PET bottles are loaded into the machine through the hopper. The shaft rotates the loaded PET bottles into the space between the fixed blades, this allows the blade to exert enough force to overcome the shear resistance of the bottles. The fixed blade is bolted to the frame and enters into the crushing compartment. The main important components of the machine are the frame, hopper, fixed and rotary cutters, pulleys, electric motor, bearing, perforated barrel as shown in Figure 3.3

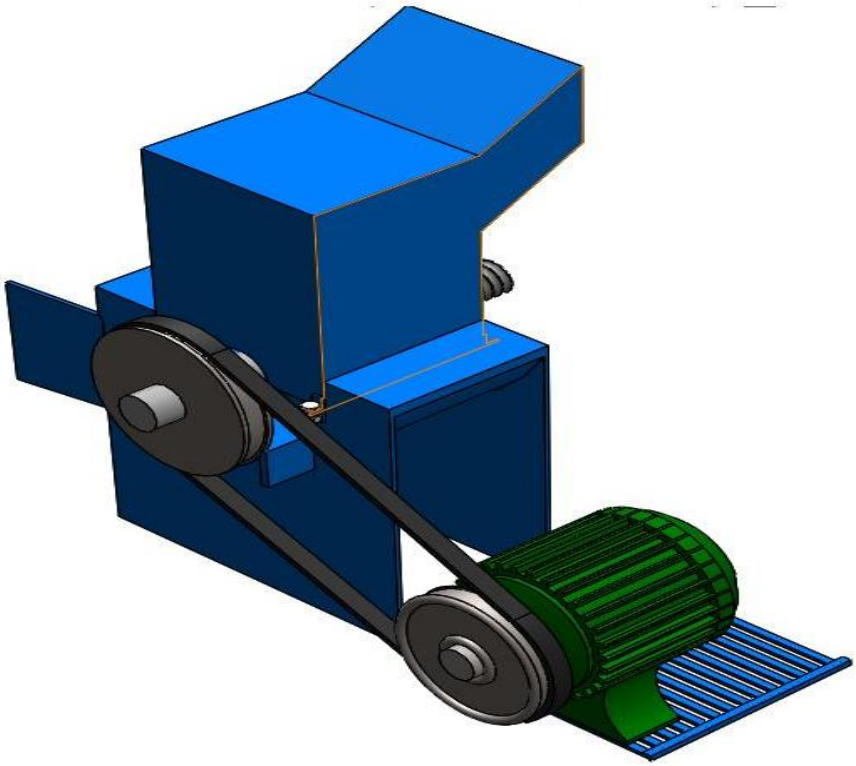

Figure 3.3: Isometric view of design concept two Second (Rotary blade against a fixed blade)

The main function of the hopper like concept one is to feed the machine with the waste plastic bottles. The frame also guides, support and hold in accurate alignment all the moving members of the operating machine. The frame was constructed from angle bar to give rigidity and stability that will withstand load and vibrations. The barrel that houses the cutting chamber is perforated with a hole of 5mm so that the crushed waste plastic bottle goes through it into a collecting trough. The machine is also powered by electric motor via belt drive connected to the main shaft that turns the rotary cutters. The design of a waste plastic bottle crushing machine includes determination of the volume of the hopper unit and the force that could crush the plastic bottles and the selection of a convenient material for the construction of the individual units. The bulk of the parts of the machine were fabricated using mild steel for reasons stated earlier in concept one except for the cutters that are made of high carbon steel.

3.8.3. Mode of operation of the machine

The waste plastic bottles are fed into the hopper whole without material preparation. The PET bottles waste settles down in the barrel that has in it fixed and rotary cutters made of high carbon steel. The rotary cutters are set into motion by switching on the 10 horse power electric motor that runs at 1440rpm. Also, there is a clearance between the fixed and rotary cutters where the waste water bottles drop and are constantly being smashed by the rotary cutters repeatedly until they are crushed. The crushed particles in the perforated barrel drops under gravity through the perforations of about 5mm and collected underneath with a trough.

3.9. Selection of concept for detail design

Decision matrix was used to select the best concept for detail design and fabrication. A decision matrix is a list of values in rows and columns that allow an analyst to systematically analyze and rate the performance of relationships between sets of values and information. Each category is assigned a weighing factor base on believe which measures its relative importance (Norton, 1999). Details of the matrixes used are shown in Table 3.1.

Table 3.1: Decision matrix

CONSIDERATIONS	WEIGHTING FACTOR	CONCEPT 1		CONCEPT 2	
COST	0.20	3.5	0.70	4	0.8
FUNCTIONALITY	0.10	5	0.5	4	0.4
EFFICIENCY	0.20	3	0.6	5	1.0
PORTABILITY	0.10	2	0.1	2.5	0.125
MAINTENANCE	0.10	3	0.3	4	0.4
DURABILITY	0.15	4	0.6	3	0.45
SAFETY	0.15	4	0.6	3.5	0.53
TOTAL	1.00		3.4		3.705

Based on the ranking, second concept was selected for detail design and fabrication. However, the first design concept was not considered due to energy losses (due to friction) resulting from rubbing surfaces between the sliding parts and the frame as well as the space occupied

by the machine. The orthographic drawings of the selected design concepts are presented in appendix (1-7).

3.10 Detail Design

3.10.1 Experimental Design

The shearing force required is given by the analysis below:

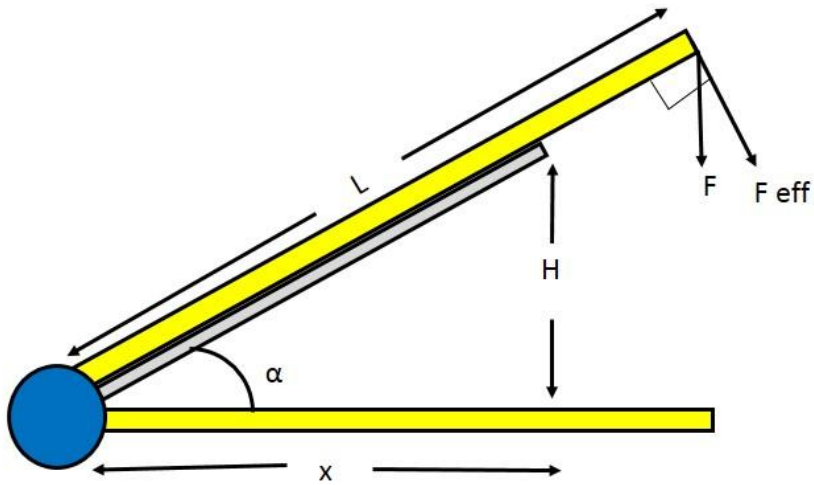

Figure 3.1: Analysis of a guillotine

The following is an analysis to determine the power required to shear the bottles.

F eff is the effective cutting force required (applied normal to the Handle)

L is the length of the force from the pivot

x is the horizontal length of the gutting blade from the pivot

H is the height of the blade from the Base

F is the cutting force applied to the Handle

α is the angle Between the blade and the base

Lb is the length of the cutting blade

Now if a force F is applied at the handle. The equation for the effective force is given by:

(3.1)

And

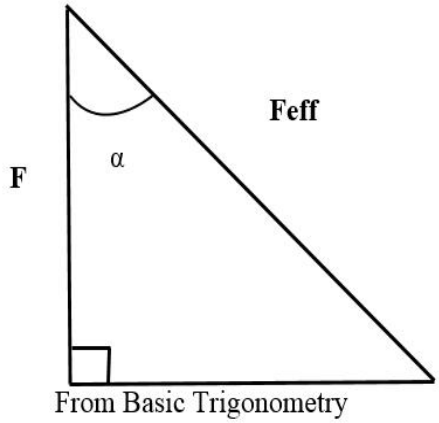

Figure 3.2: Schematic of Forces acting at the Handle

(3.2)

(3.2)

We know that torque is the turning force of the blades

(Where Area = Thickness of blade x Length in contact with bottle) (3.4)

(3.5)

Therefore, the equation for Power is:

(3.5)

$\omega = 2\pi N/60$

$T = F \times r$ where r= radius of the blade

3.10.2 Crushing power required

The power requires to crush plastic bottle wastes is given by (3.2)

P = FV

(3.2)

Where,

P = power to turn the shaft

V = speed

Force (F) = Mass x acceleration due to gravity (g)

Average Mass (M_1) of PET bottle fed into the machine = 56.0kg (measured)

g = 10m/s^2

Therefore,

Weight of shaft = 125N

Weight of crushing blade = 100N

Weight of hopper = 25.5N

Total force = Average Mass (M_1) + Weight of shaft + Weight of crushing blade = 56.0N + 125N + 100N = 278N

$$V = \frac{\pi DN}{60}$$

(3.3)

Where,

V= Speed

D= Diameter = 150mm =0.15m

d = 50mm =0.05m

R =75mm= 0.075m

r = 25mm = 0.025m

N= Speed in revolution per minute = 1440 rpm

From equation 3.2

But,

1hp = 750 watts

Thus,

3466.9 watts = 4.19hp

3.10.3 Belt design

The diagram below shows the free body diagram of the pulley and their belt length.

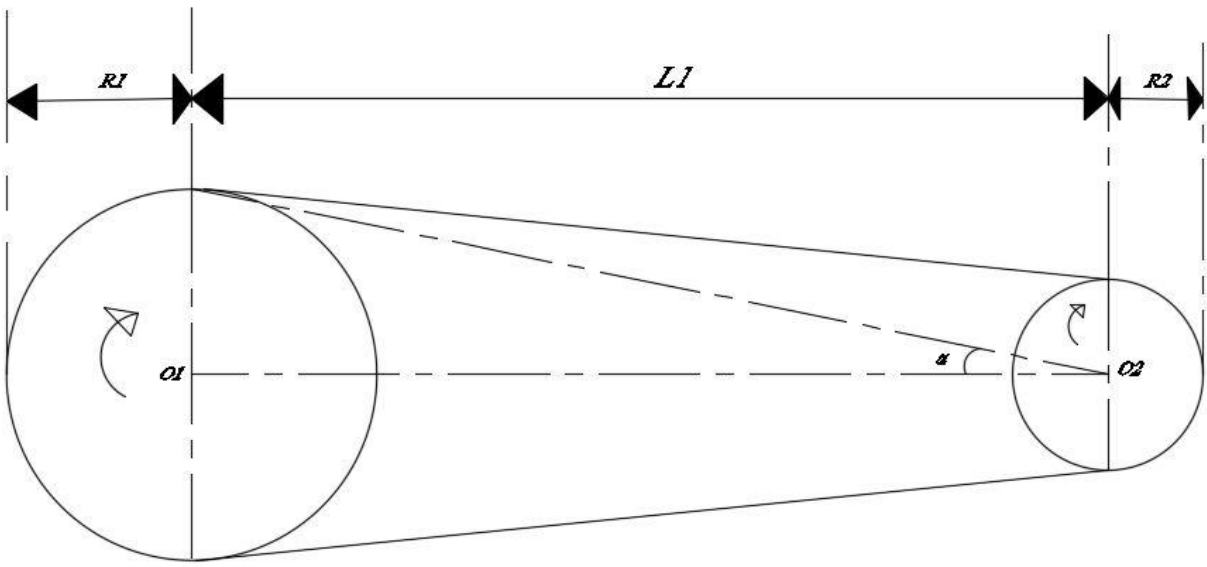

Figure 3.3: Schematic of Belt with pulleys 1 and 2

R_1 and R_2 = Radii of the larger and smaller pulleys,
l_1 = Distance between the centres of two pulleys (*i.e.* $O1$, $O2$), and
L = Total length of the belt.

The length of an open cross drive is given by the equation

(3.3)

Therefore

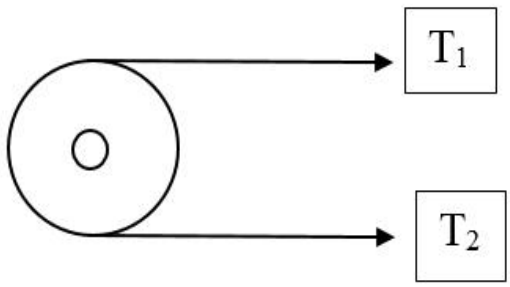

Figure 3.4: Schematic Diagram of Belt Tension

(3.4)

Where,

θ = angle of wrap of an open belt

μ = coefficient of friction

T_1 = Tension in the tight side of the belt

T_2 = tension in the slack side of the belt

x = distance between the pulleys

For cross belt,

Angle of contact is given by;

$$\sin\alpha = \frac{R+r}{x}$$

(3.5)

For open belt,

Angle of contact is given by:

$$\sin\alpha = \frac{R-r}{x}$$

(3.6)

Angle of wrap;

$$\theta = 180 \pm 2\sin^{-1}\left(\frac{R-r}{x}\right)$$

(3.7)

Where,

r = radius of small pulley

R = radius of big pulley

X = distance between the two pulleys

For peeling machine with inner (rotation) the angle of contact is,

For open belt from equation (5) angle of contact is given by

$$Sin\alpha = \frac{R-r}{x}$$

(3.8)

Angle of wrap,

$$\theta = 180 \pm 2\sin^{-1}\left(\frac{R-r}{x}\right)$$

(3.9)

$$P = (T_1 - T_2)v$$

(3.10)

Where,

P = Belt power (watts)

V = Belt speed (m/sec)

T_1 and T_2 are tension on the tight and slack sides respectively (N)

But,

$$T_1 - T_2 = \frac{p}{v}$$

(3.11)

Recalling,

$$2.3\log\left(T_1/T_2\right) = \mu\theta$$

Where μ = coefficient of friction between belt at pulley for mild steel pulley and rubber belt,

$\mu = 0.30$ (Khurmi and Gupta)

But for open belt, angle of contact is given by,

Therefore,

Also,

$= 143.58^{o}$

Converting the angle from degree to radian

= 2.51rad

But,

$P = (T_1 - T_2)\ V$

Therefore,

$T_1 - T_2 =$

$T_1 - T_2 =$

$T_1 - T_2 = 670.07N$

(3.12)

Calculating the belt ratio for an open belt

2.3log=

Coefficient of friction between belt and pulley

But for mild steel pulley and rubber belt,

0.30 (khurmi and Gupta)

2.3log=

2.3log=

Log=

Log=

=1.4465

Therefore,

$T_1 = 1.446T_2$

(3.13)

From equation 3.12,

$T_1 - T_2 = 670.07N$

(3.14)

$T_1 = 670.07N + T_2$

(3.15)

Equating equation 3.13 and equation 3.15

$1.4464\ T_2 = 670.07N + T_2$

$1.4464\ T_2 - T_2 = 670.07N$

Therefore,

$0.4464\ T_2 = 670.07N$

Therefore,

Also,

$T_1 = 1.4464T_2$

$T_1 = 1.4464 \times 1501.05 = 2171.12N$

From equation 3.16,

$T_1 = 670.07N + T_2$

$T_1 = 670.07N + 1501.05N = 2171.12N$

Therefore,

$T = T_1 + T_2 = 2171.12N + 1501.05N = 3672.17N$

3.10.4 Design for velocity ratio for belt drive

Velocity ratio for belt drive is the ratio between the velocity of the driver and the follower (driven). It may be expressed mathematically as:

(3.16)

Where,

d_1 = diameter of the driver

d_2 = diameter of the follower

N_1 = speed of the driver

N_2 = speed of the follower

Length of the belt that passes over the driver in one minute is given by;

$\pi d_1 N_1$

(3.17)

Similarly, length of belt that passes over the follower in one minute is given by,

$\pi d_2 N_2$

(3.18)

Since the belt passes over the driver in one minute is equal to the length of the belt that passes over the follower in one minute

Therefore;

$\pi d_1 N_1 = \pi d_2 N_2$

(3.19)

Therefore,

(3.20)

But,

= 100mm

=150mm

= 1440rpm

= 3:1

Therefore,

Velocity ratio of belt drive = 3:1

3.10.5 Bearing Design

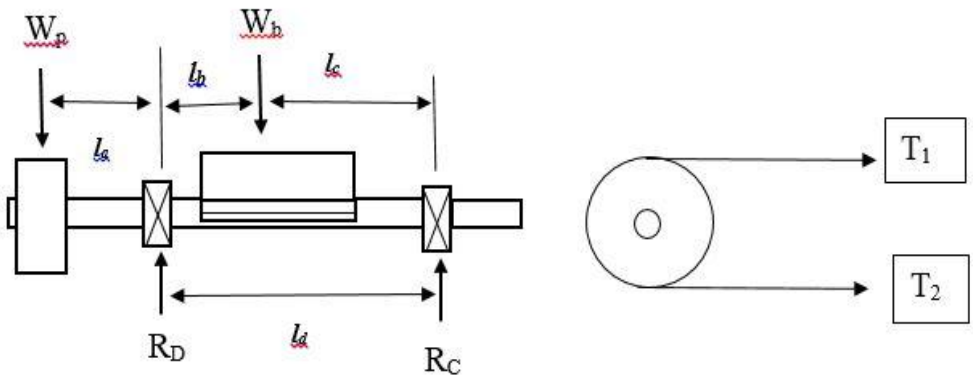

Below is a schematic showing all the forces and reactions on the shaft

Figure 3.5: Schematic Diagram of Weight and Bearing Reactions

W_p = The weight of the pulley

W_b = the weight of the blade

R_C = the reaction of bearing A

R_D = the reaction at B

T_1 = the tension in belt on the tight side

T_2 = the tension in the slack side

W_R = the sum of all the upward forces

Therefore,

$W_R = W_b + W_p$

W_b=225N

W_p =

Taking upward forces as negative

$\sum F = 0$

Algebraic Sum of upward reaction (forces) + downward reaction (forces) = 0

$-(R_C + R_D) + W_R = 0$

Subsequently:

(3.21)

(3.22)

Taking moment about point C

Anticlockwise Moments are Positive

Therefore

The reaction on Bearing C acts downwardBut;

3897.17N

Therefore;

3.10.6 Selection of bearing C

(3.22)

Where,

L_{10}= basic dynamic life of the bearing (million rev.)

L = Life of the bearing

N = 1440rpm

Therefore;

Also;

(3.23)

Where;

F_e = Equivalent dynamic load

x = Rotational factor

C_r = Radial factor

F_r = Radial load

C_t = Thrust factor

F_t = Thrust load

S_f =Safety or service factor

x=1 (inner raceway)

Since the bearing will not be carrying axial load, F_t=0

Equation (3.23) reduces to,

F_e= (xC_rF_r)S_f

(3.24)

S_f = 1.1≤ S_f(for rotating part)

If,

(3.25)

C_r = 1 and C_t = 0

Also,

(3.26)

C_r=0.56

And C_t is interpolated or extrapolated.

For,

Therefore,

C_r = 1 and C_t=0

Hence,

F_e= (1×1×2470.75) ×1.4

= 3459.05N

F_e=3459.05N

From,

C=.Fe (3.27)

Where,

C = Basic dynamic load

K = 3 (Ball bearing)

Therefore,

C=×3459.05N = 42843.09N

C=42843.09N

Having obtained the basic dynamic load, a deep groove ball bearing was selected from SKF bearing catalogue.

Deep groove ball bearing was selected based on the following reasons

i. Cost.

ii. Maintenance.

The design of bearing and shaft was carried out base on the following data obtained from the SKF bearing catalogue. Considering safety, straightness of the shaft, tolerance, a dynamic load higher than the calculated basic dynamic load was selected.

Basic dynamic load (C) = 85200N

Shaft diameter (d) =120 mm

Bearing thickness (B) = 40mm

Bore Diameter (D) =180 mm

Mass (M) = 2.05kg

Designation =6024-2Z

3.10.7 Selection of bearing D

Recalling,

= 1728mill rev

Also,

$F_e = (xC_rF_r)S_f$

$F_e = (1\times1\times6142.92)1.4$

$F_e = 8600.09N$

From,

C=.Fe

C=×8600.09N

C = 12×8600.09N

C=103201.08N

Considering safety, straightness of the shaft, tolerance, a dynamic load higher than the calculated basic dynamic load was selected. Also, a deep groove ball bearing was selected based on cost, maintenance from SKF bearing catalogue (Appendix 1).

Basic dynamic load (C) =146000N

Shaft diameter (d) = 120mm

Bearing thickness (B) = 40mm

Bore Diameter (D) =215mm

Mass (M) =5.15kg

Designation = 6224-2Z

3.10.8 Bending moment diagram

3.10.8.1 Shearing force on shaft

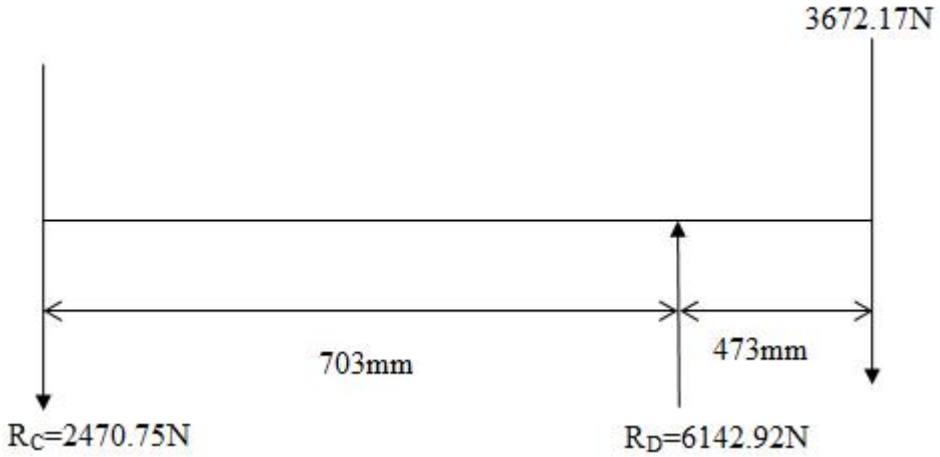

Figure 3.6: Free Body Diagram of shaft

Let S be the sharing force

S_A =- 2470.75N

S_D= S_A+S_B = 3672.17N = T

S_D-T=0

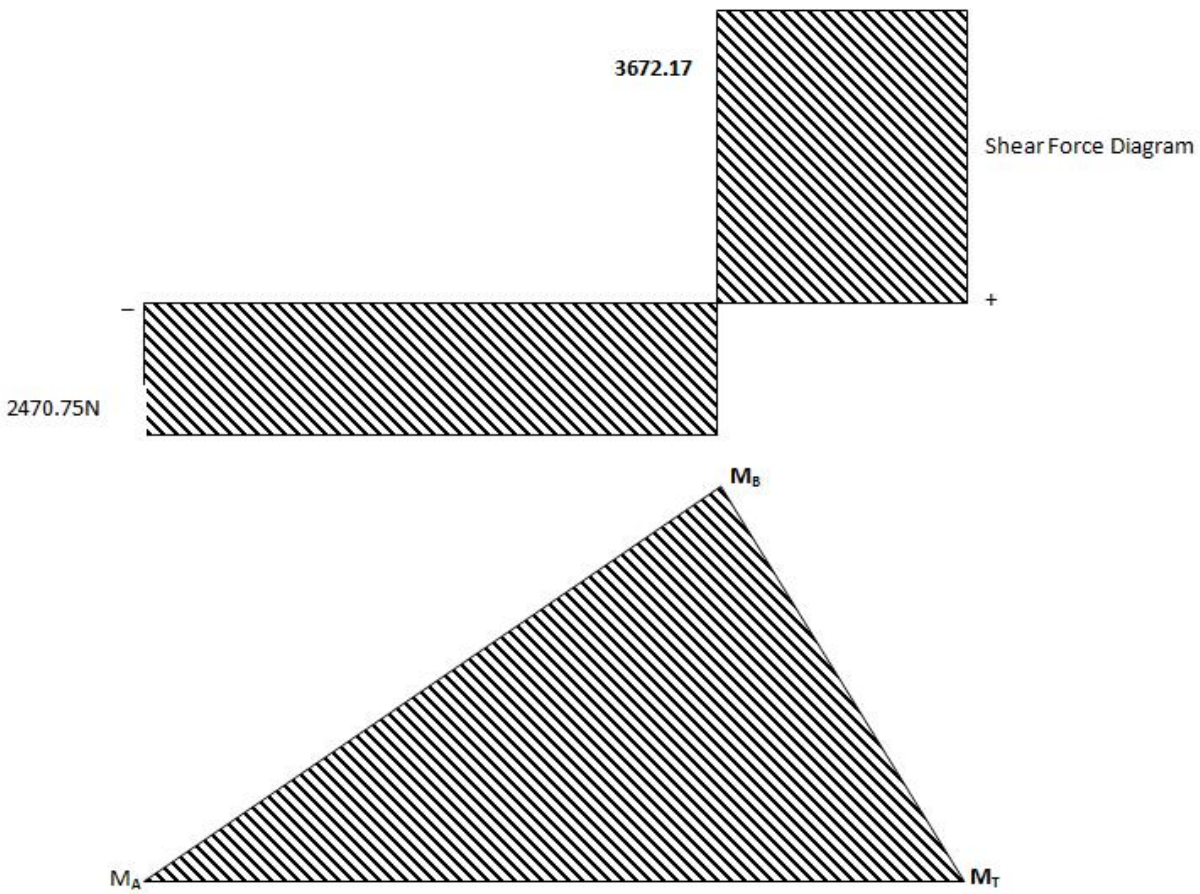

Figure 3.7: Shear Force and Moment Diagram

$M_A = 0$

$M_B = 3672.17N \times 0.703m = 2581.54Nm$

$M_T = 0$

3.10.8.2. Design for shaft

T_D= Design torque = Fr

K_l= Load factor=1.75 for line shaft

But,

r = 1.179m

Thus, for diameter of shaft

Where,

M=Bending moment

For suddenly applied load (heavy shock), the following values are recommended for Kb and K_t

K_b= 2 to 3

K_t= 1.5 to 3

Selecting material of shaft SAE 1030

S_{ut}= 527MPa

S_{yt}=296MPa τmax≤0.30Syt τmax≤0.18Sut

Where,

S_{ut}= Ultimate yield strength

S_{yt}= Yield strength

=0.120m =120mm

3.11. Fabrication

The following manufacturing processes were used for the fabrication of the crushing machine.

3.11.1. Cutting process

For the cutting process the cutting machining method was used for all components and machine elements that requires cutting. Such components include the frame, frame housing, Hopper etc. The tools used for the cutting process include hacksaw, hand grinding and cutting machine.

3.11.2. Welding process

Welding involves the joining of two or more metals together and this can be achieved either by gas welding or arc welding which is the most common welding operation. Electric arc welding operation was adopted in joining the double chamber of the PET (polyethylene theraphtalate) bottle crushing machine component in this project work. It was equally applied for all parts required to be joined together.

3.11.3 Grinding and Filling operation

In this operation, it is simply a surface finishing process. This process was used to provide smooth surface for the machine and its components parts. However, filling was used to remove unwanted parts and metals and this brought about a good surface finish.

3.11.4. Drilling and boring operation

Drilling and boring operation are mainly applied in machine operation for making holes for temporary joints. On the other hand, boring is simply enlarging the drilled hole to the required dimension. Both machining processes were applied in fabrication of the crushing chamber of the PET (Polyethylene Terephthalate) bottle crushing machine especially in the parts/components were bolt and nuts were required.

3.11.5. Fastening

Fastening is also a temporary joining process and it involves bringing two or more separate parts together. This is done in such a way that the joint can be disassembled and maintained. For this project work, bolts and nuts, screws, washers and keys were fastened by use of a fastener.

3.11.6. Painting

The entire assembled machine (both inner and outer) was thoroughly painted (coating) not only to provide good surface finish but most importantly for the purpose of protecting the metals against corrosion which will enhance longevity of the machine.

3.11.7. Assembly process

The assembly process involves the joining of the different parts of the machine. The joint can be temporary or permanent. Some parts/components of the crushing chamber of the PET (Polyethylene Terephthalate) bottle crushing machine was assembled temporary while other parts/components permanently.

3.11.8. Safety precaution taken

Hazard is being posed during and after fabrication. For safety use of the machine domestically and commercially, necessary safety precautions were taken. The following safety precautions were taken;

i. Operator of the machine should be familiar with the mode of operation of the machine.

ii. When machine is on, the PET (polyethylene terephthalate) bottles should be properly and appropriately fed into the feed hopper of the machine.

iii. The machine should be switch off when not in use.

The isometric drawing, orthographic drawing, components drawing and detail drawing of the crushing machine is shown in the appendices.

Table 3.2: BILL OF ENGINEERING MATERIALS AND EVALUATION

S/N	COMPONENT	MATERIAL	DIMENSIONS (mm)	QTY	UNIT COST (₦)	TOTAL COST (₦)
1	Electric motor	N/A	10hp	1	1	83,800
2	Bearing	Stainless Steel	N/A	16	200	3200
3	Belt	Rubber	A35	1	200	200
4	Big Pulley	Cast iron	Dia. ; 145	1	2500	3500
5	Small pulley	Cast iron	Dia. ; 40	1	1000	1500
6	Solid Shaft	Stainless Steel (ASTM A36)	Length: Dia:	8	500	6000
7	Angle bar	Mild Steel (ASTM A36)	Length: 5400 50x50x3	2	1000	3000
8	Steel plate	Mild Steel (ASTM A36)	300x200x1.2	1	1500	3500
9	Capacitor	N/A		1	500	1000
10	Bolt & Nut	Mild Steel (ASTM A36)	13	50	20	1000
11	Electrode	N/A	N/A	500	-	1500
TOTAL						**108,200**

Table 3.3 shows the total cost

Table 3.3: Total cost

S/N	Category	Cost (₦)
1	Materials	108,200
2	Miscellaneous Expenses	30,000
Total		**138,200**

CHAPTER FOUR

RESULTS AND DISCUSSION

4.1 Results of Feasibility Studies

The result obtained from feasibility test is showed in Table 4.1. One hundred different households were used and from the percentage composition of the solid waste household generation, 6% of plastic wastes are generated per person daily in Benin City, Oredo LGA. Thus, there is the need for plastic crushing machine to minimize the volume of PET bottle wastes generated in Nigeria cities.

Table 4.1: Feasibility results of solid waste characterization

S/N	NFM	PPW (kg)	PW (kg)	FW (kg)	GW (kg)	MW (kg)	OW(kg)
1	3	0.108	0.180	0.969	0.126	0.054	0.039
2	5	0.135	0.290	1.445	0.120	0.091	0.045
3	4	0.144	0.236	1.292	0.088	0.073	0.036
4	4	0.149	0.229	1.284	0.092	0.069	0.032
5	5	0.104	0.300	1.280	0.105	0.085	0.040
6	2	0.072	0.124	0.670	0.084	0.038	0.065
7	6	0.168	0.360	1.734	0.126	0.108	0.026
8	5	0.140	0.217	1.625	0.110	0.083	0.048
9	4	0.143	0.189	1.236	0.092	0.079	0.037
10	5	0.102	0.276	1.685	0.043	0.087	0.033
11	3	0.101	0.109	1.014	0.048	0.051	0.031
12	6	0.161	0.301	1.794	0.186	0.096	0.043
13	4	0.112	0.232	1.260	0.092	0.063	0.029
14	3	0.084	0.174	0.981	0.075	0.051	0.033
15	3	0.079	0.168	0.963	0.068	0.047	0.035
16	4	0.120	0.231	1.284	0.146	0.071	0.042
17	4	0.099	0.228	1.196	0.078	0.068	0.039
18	5	0.109	0.285	1.680	0.155	0.084	0.053
19	4	0.106	0.221	1.276	0.069	0.068	0.041
20	4	0.110	0.209	1.244	0.024	0.064	0.039
21	4	0.109	0.189	1.196	0.018	0.054	0.038
22	5	0.142	0.200	1.650	0.154	0.083	0.041
23	6	0.167	0.319	2.010	0.186	0.101	0.054
24	5	0.147	0.294	1.685	0.123	0.093	0.045
25	4	0.113	0.231	1.196	0.076	0.063	0.037
26	3	0.093	0.177	0.963	0.045	0.051	0.024
27	4	0.119	0.231	1.340	0.113	0.063	0.038
28	5	0.137	0.291	2.545	0.156	0.072	0.041
29	4	0.121	0.209	1.356	0.083	0.063	0.033
30	4	0.089	0.221	1.453	0.097	0.059	0.041
31	4	0.100	0.198	1.223	0.082	0.071	0.039

32	5	0.151	0.207	1.615	0.125	0.078	0.049
33	5	0.170	0.315	1.518	0.075	0.069	0.047
34	5	0.201	0.269	1.525	0.062	0.034	0.051
35	3	0.009	0.174	1.017	0.069	0.045	0.035
36	2	0.072	0.119	0.690	0.046	0.031	0.026
37	3	0.108	0.147	1.536	0.067	0.050	0.041
38	4	0.108	0.227	1.205	0.102	0.061	0.051
39	4	0.109	0.301	1.234	0.083	0.059	0.053
40	3	0.081	0.243	1.017	0.063	0.051	0.041
41	5	0.135	0.285	1.645	0.123	0.073	0.031
42	4	0.108	0.342	1.584	0.045	0.063	0.013
43	5	0.129	0.298	2.295	0.110	0.072	0.071
44	3	0.099	0.201	0.894	0.072	0.053	0.008
45	2	0.116	0.099	0.648	0.047	0.035	0.042
46	4	0.104	0.207	1.234	0.092	0.061	0.061
47	3	0.101	0.231	0.963	0.079	0.062	0.039
48	2	0.069	0.123	0.598	0.063	0.045	0.060
49	5	0.124	0.280	1.645	0.102	0.079	0.055
50	7	0.187	0.398	2.436	0.161	0.063	0.063
51	5	0.126	0.410	1.605	0.106	0.054	0.051
52	4	0.104	0.301	1.284	0.086	0.042	0.028
53	5	0.136	0.089	1.563	0.123	0.082	0.045
54	5	0.123	0.072	1.605	0.131	0.073	0.053
55	5	0.112	0.386	1.573	0.100	0.043	0.049
56	5	0.099	0.216	1.755	0.106	0.029	0.057
57	4	0.132	0.141	1.248	0.092	0.049	0.051
58	3	0.106	0.120	0.997	0.067	0.034	0.041
59	3	0.100	0.139	0.894	0.072	0.019	0.032
60	3	0.109	0.063	1.542	0.093	0.042	0.043
61	4	0.103	0.172	0.952	0.069	0.064	0.047
62	3	0.089	0.155	0.915	0.022	0.057	0.009
63	7	0.201	0.341	2.268	0.067	0.112	0.081
64	5	0.174	0.292	1.625	0.075	0.082	0.008
65	6	0.211	0.383	2.070	0.126	0.102	0.047
66	4	0.101	0.137	1.300	0.108	0.071	0.034
67	3	0.083	0.164	0.974	0.069	0.053	0.035
68	5	0.167	0.292	1.605	0.115	0.085	0.051
69	6	0.132	0.386	2.364	0.053	0.101	0.061
70	4	0.136	0.091	1.234	0.087	0.065	0.024
71	3	0.087	0.092	0.963	0.687	0.042	0.063
72	5	0.167	0.167	0.735	0.096	0.063	0.032
73	5	0.179	0.239	1.620	0.109	0.059	0.062
74	3	0.102	0.192	0.936	0.048	0.048	0.042
75	5	0.180	0.201	1.625	0.155	0.076	0.057
76	4	0.112	0.255	1.580	0.096	0.064	0.052
77	3	0.084	0.292	0.936	0.067	0.051	0.031
78	5	0.145	0.384	1.674	0.019	0.081	0.067
79	2	0.072	0.131	1.648	0.049	0.039	0.023

80	5	0.170	0.340	1.549	0.156	0.096	0.063
81	6	0.201	0.283	1.873	0.018	0.101	0.072
82	3	0.092	0.201	0.913	0.069	0.052	0.037
83	5	0.102	0.286	1.512	0.026	0.074	0.047
84	5	0.097	0.384	1.615	0.173	0.083	0.058
85	3	0.076	0.139	0.974	0.071	0.054	0.041
86	4	0.105	0.367	0.945	0.191	0.063	0.052
87	5	0.134	0.272	1.575	0.108	0.092	0.029
88	4	0.109	0.186	1.246	0.063	0.063	0.043
89	3	0.078	0.120	0.936	0.056	0.051	0.056
90	4	0.160	0.292	1.248	0.076	0.073	0.063
91	5	0.220	0.384	1.745	0.123	0.071	0.031
92	3	0.089	0.237	0.936	0.012	0.034	0.065
93	5	0.102	0.155	1.495	0.120	0.061	0.023
94	4	0.101	0.284	1.286	0.089	0.073	0.048
95	5	0.102	0.340	1.640	0.105	0.083	0.061
96	3	0.097	0.089	1.065	0.067	0.052	0.036
97	5	0.089	0.092	1.572	0.087	0.083	0.060
98	4	0.104	0.386	1.284	0.067	0.066	0.049
99	5	0.105	0.272	1.845	0.152	0.069	0.059
100	4	0.102	0.139	1.340	0.096	0.067	0.047
∑	**425**	**11.842**	**21.35**	**141.240**	**8.307**	**6.452**	**4.435**
WG_{PHH}		**0.118**	**0.213**	**1.412**	**0.083**	**0.065**	**0.044**
WG_{PP}		**0.028**	**0.050**	**0.332**	**0.019**	**0.015**	**0.010**

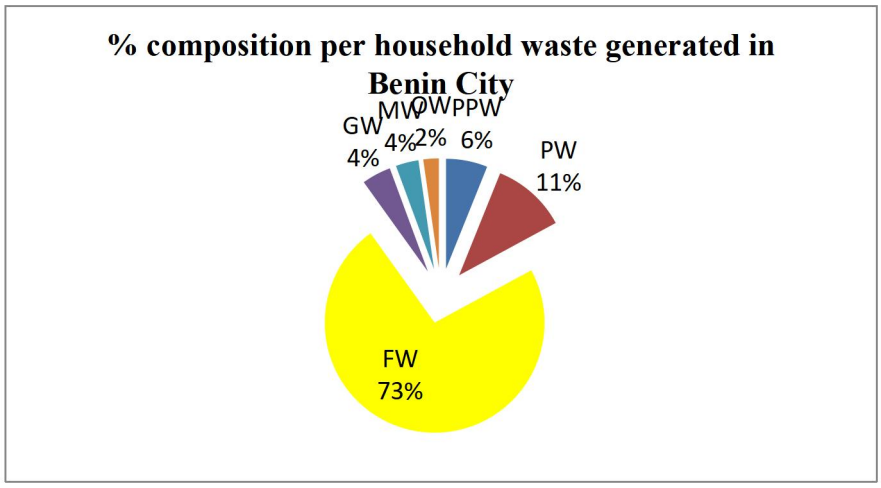

PPW= PET Plastic waste

FW- Food Waste

OW- Other Waste

PW- Paper Waste

MW- Metal Waste

Figure 4.1: Percentage Composition per household waste generated in Benin City, Oredo LGA

From Figure 4.1, food waste (FW) has the highest percentage by composition of waste generated in Benin City. However, food waste takes short period of time for decomposition

unlike plastic waste (11%) which can take a very long period of time for degradation (even thousands and millions of years as the case may be). This makes it necessary for proper management of plastic waste thus the crushing machine. The percentage composition of Metal waste (4%), paper waste (6%) and other waste (2%) make up the other composition.

4.2 Shearing Force and power experiment results

An experiment to determine the shear force required to overcome the shear resistance of PET bottles were carried out PET bottle samples with different strength requirements. A guillotine cutter was used to cut the flattened bottle under the influence of some desired dead weights. The mathematical analysis has been carried out in chapter three (3.7). The experimental results are presented in Table (4.2).

Where x=1.095m, L_b= 1.1m, L=1.6m, cos α= 0.995, ω=50.266rads^{-1}

Table 4.2: Results from shear force experiment on guillotine

Mass (Kg)	Weight (N)	F_{eff} (N)	Shear Stress(N/m^2)	F_m (N)	Torque (N.m)	Power (KW)	Power (Hp)
30	294.3	292.9623	2929623	219.7217	30.76103864	1.546234	2.0735
35	343.35	341.7893	3417893	256.342	35.88787841	1.80394	2.419084
40	441.45	390.6164	3906164	292.9623	41.01471818	2.061646	2.764667
45	490.5	439.4434	4394434	329.5826	46.14155795	2.319352	3.11025
50	539.55	488.2705	4882705	366.2028	51.26839773	2.577057	3.455834
55	588.6	537.0975	5370975	402.8231	56.3952375	2.834763	3.801417

60	637.65	585.9245	5859245	439.4434	61.52207727	3.092469	4.147001
65	686.7	634.7516	6347516	476.0637	66.64891705	3.350174	4.492584
70	735.75	683.5786	6835786	512.684	71.77575682	3.60788	4.838167
75	784.8	732.4057	7324057	549.3043	76.90259659	3.865586	5.183751
80	441.45	781.2327	7812327	585.9245	82.02943636	4.123292	5.529334

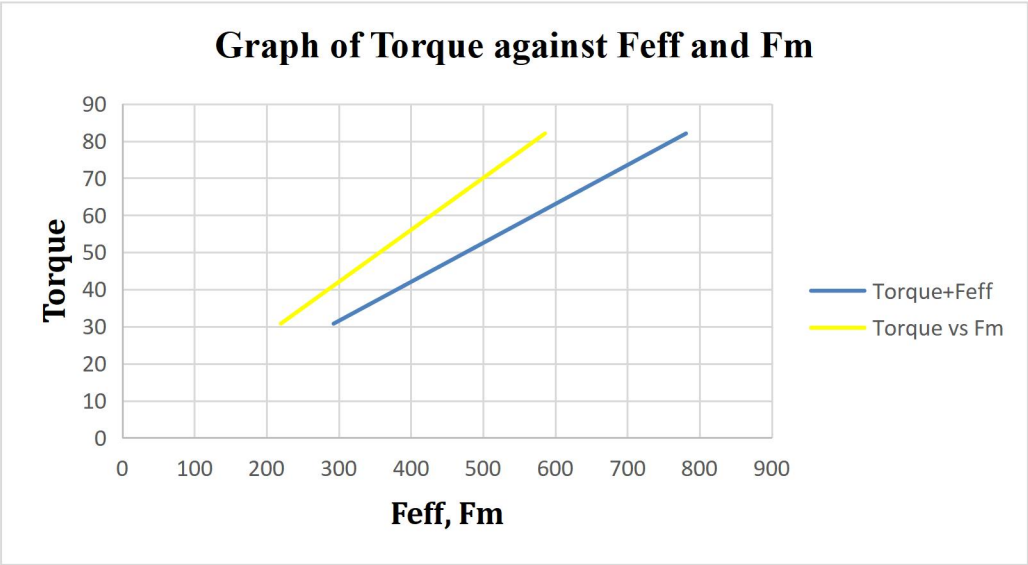

Figure 4.2: Graph of Force against Effective Crushing force and Torque

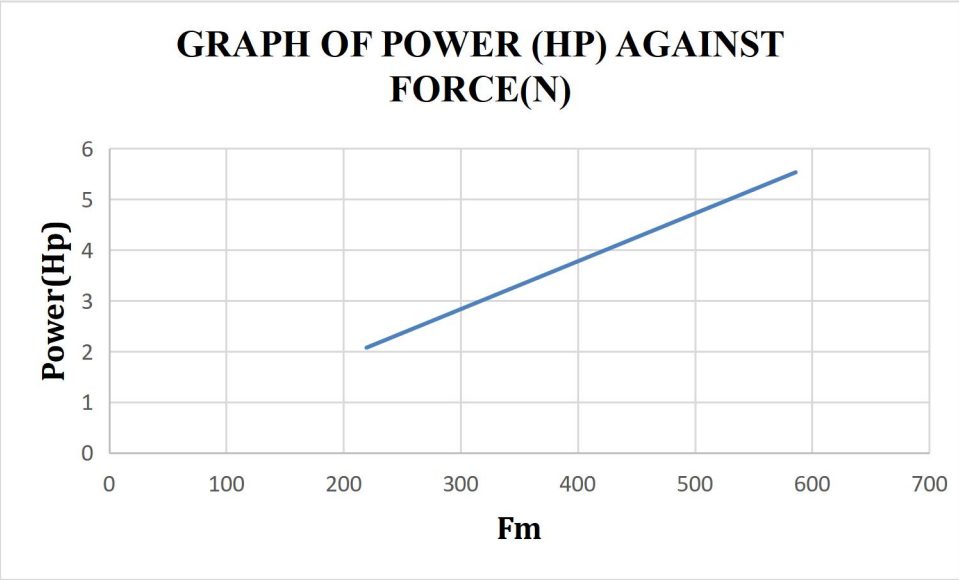

Figure 4.3: Graph of Crushing Force (Fm) against Power

Table 4.3: Result Obtained from the PET bottles Crushing Machine

S/N	Mass of PET Bottles fed into crushing machine M_1 (kg)	Mass of properly crushed PET Bottles M_2 (kg)	Crushing Time (s)	MTC (kg/s)
1	3.4	1.8	56	0.061
2	9.6	6.2	104	0.092
3	16.7	11.6	122	0.137
4	20.4	15.4	144	0.142
5	24.8	20.1	182	0.136
6	30.2	25.7	248	0.122
7	36.3	32.3	294	0.123
8	43.4	38.5	338	0.128
9	64.7	47.9	420	0.154
10	66.5	52.4	537	0.124
11	70.6	57.2	649	0.109
12	76.7	66.4	702	0.109
13	80.2	69.8	824	0.097

14	83.9	70.6	832	0.101
15	86.0	72.5	898	0.096
16	92.2	75.7	984	0.094
17	96.7	79.4	1010	0.096
18	104.6	84.8	1016	0.103
Σ	1006.9	828.3	9,360	2.024
Ave	56.0	46.02	520	0.112

The machine through put capacity is calculated from equation 4.1

(4.1)

Where,

MTC = Machine through put capacity

M_1 = Mass of used PET bottle fed into the machine

M_2 = Mass of crush PET bottle plastic waste

T = Machine crushing time

The mass of PET Bottles fed into crushing machine M1 (kg) was used in testing the crushing efficiency of the machine for each interval, and this was carried out for eighteen times during which the input (M1) and the output (M2) was recorded accordingly. The average of waste PET plastic bottle fed into crushing machine and the mass of plastic bottle properly crushed to require sizes were calculated and it was used to determine the efficiency of the plastic crushing machine as shown in (4.2) and (4.3).

(4.2)

(4.3)

The output is the mass of PET plastic bottle waste properly crushed while the input is the mass of PET plastic waste bottle fed into the crushing the machine. This were substituted into equation 4.3 to determine the crushing efficiency of the machine as follows.

The results obtained showed that the machine is 82.2% efficient.

Figure 4.4 present the plot of mass of properly crushed PET plastic waste bottle against crushing time.

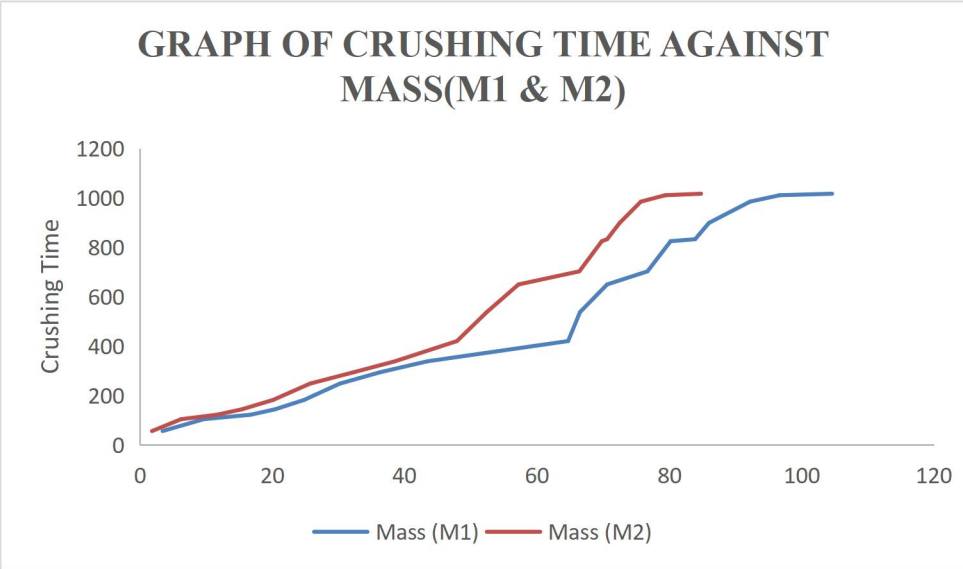

The crushing time is a function of properly crushed PET plastic waste bottle. As shown in Figure 4.4, as the mass of properly crushed plastic waste increases, the crushing time increase as well. This implies that there is a linear relationship between crushing time and masses of crushed PET

Bottle.

4.3 Computer Aided Design Results

The following analysis was carried out on the cutting blade using Solidworks to design and simulate the stresses and also to see the variations of the stress distribution at different force applications. The factor of safety was maintained at 8.

i. Initial Static analysis when varying forces 1000N-3000N is applied to the cutting blade

ii. Stress variation due to application of Varying forces

iii. Stress variation due to different grades of steel

Table (4.5) shows properties of the material used for the crushing blade design

Table (4.5): Material Properties of the crushing blade

Solid Body 1 (Cut-Sweep Blade analysis)	Solid Mesh	Material Properties	
		Material	201 Annealed Stainless

	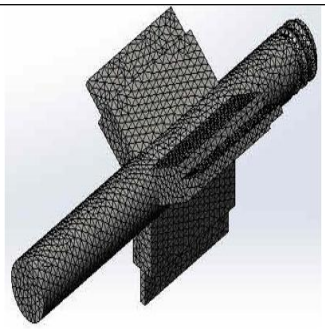		Steel (SS)
		Model type	Linear Elastic Isotropic
		Default failure criterion	Max von Mises Stress
		Yield strength	2.92e+008 N/m^2
		Tensile strength	6.85e+008 N/m^2
		Elastic modulus	2.07e+011 N/m^2
		Poisson's ratio	0.27
		Mass density	7860 kg/m^3
		Thermal expansion	1.7e-005 /Kelvin

Table 4.6: Bearing Connector Forces

This indicates the forces on the shaft due to the bearing connector. A bearing connector allows rotation in only one axis. During operation forces are set up which the bearings muat withstand from the shaft. The table shows the axial, shear and reaction force components in the X,Y,Z directions respectively.

Type	X-Component	Y-Component	Z-Component	Resultant
Axial Force (N)	0	0	-3.5353e-011	3.5353e-011
Shear Force (N)	1.9749e-009	-3.7355e-008	0	3.7407e-008
Reaction Force (N)	6.79065e-005	-2.55265e-005	2.51748e-007	7.25462e-005

4.4 Design Study

The following are results obtained when the blade was subjected to forces ranging from 1000N to 3000N using Annealed stainless steel as material, and the max Von-mises stresses induced are tabulated in Table (4.7). Figure 4.5 represents a graph of maximum Von-Mises stresses against applied force

Table 4.7: Table showing the Von Mises stress induced as a result of varying force

Parameters	Units	Scenario 1	Scenario 2	Scenario 3	Scenario 4	Scenario 5
Force	N	1000	1500	2000	2500	3000
Material	N/A	201 Annealed Stainless Steel (SS)	201 Annealed Stainless Steel (SS)	201 Annealed Stainless Steel (SS)	201 Annealed Stainless Steel (SS)	201 Annealed Stainless Steel (SS)
Constraints	(N/m^2)^2/Hz	0.000000	0.000000	0.000000	0.000000	0.000000
Max Von Mises Stress	N/m^2	6.9646e+005	1.0447e+006	1.3929e+006	1.7412e+006	2.0894e+006

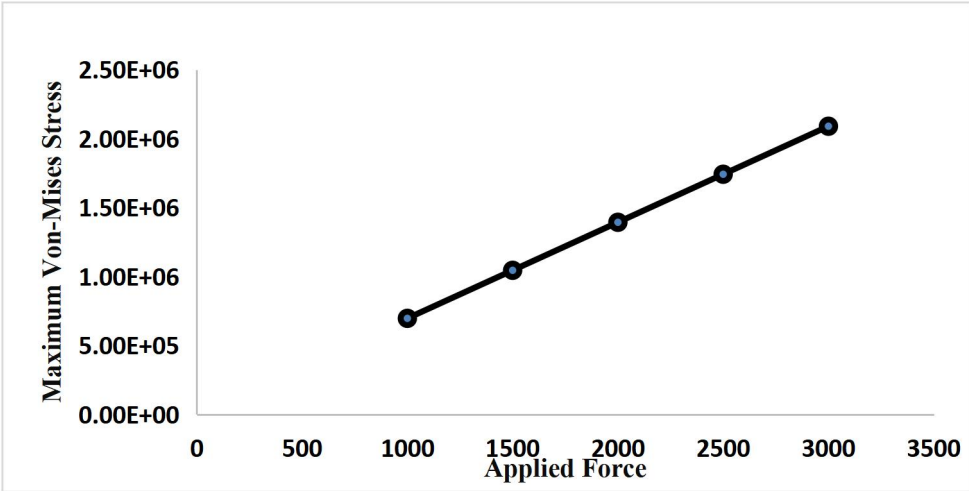

Figure 4.5: Graph of Maximum Von Mises Stresses against Applied Force

4.5 Static Stress Analysis

Using a force of 3000N to analyze the PET bottles crushing blade design model, the following Von-mises stresses and displacement were obtained as shown in Figure 4.6 and 4.7 respectively.

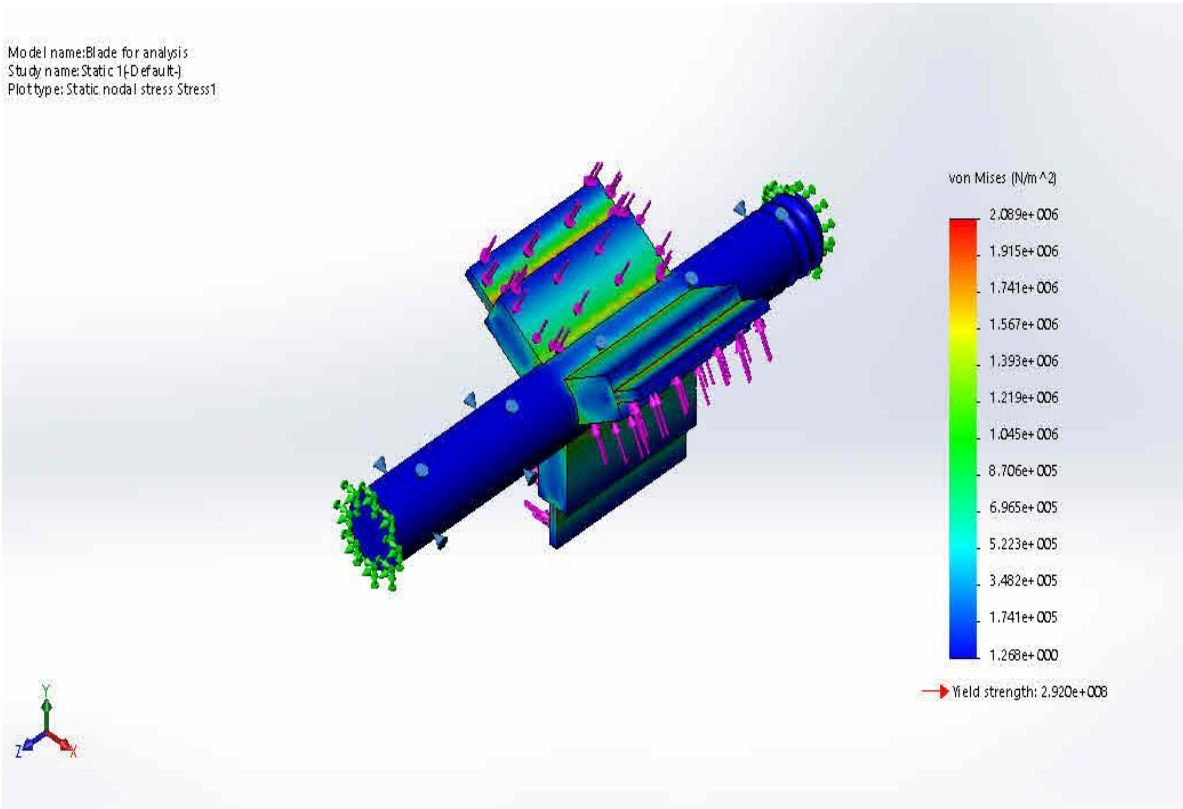

Figure 4.6: Result of Von-mises Stress Obtained from the Crushing Blade Analysis

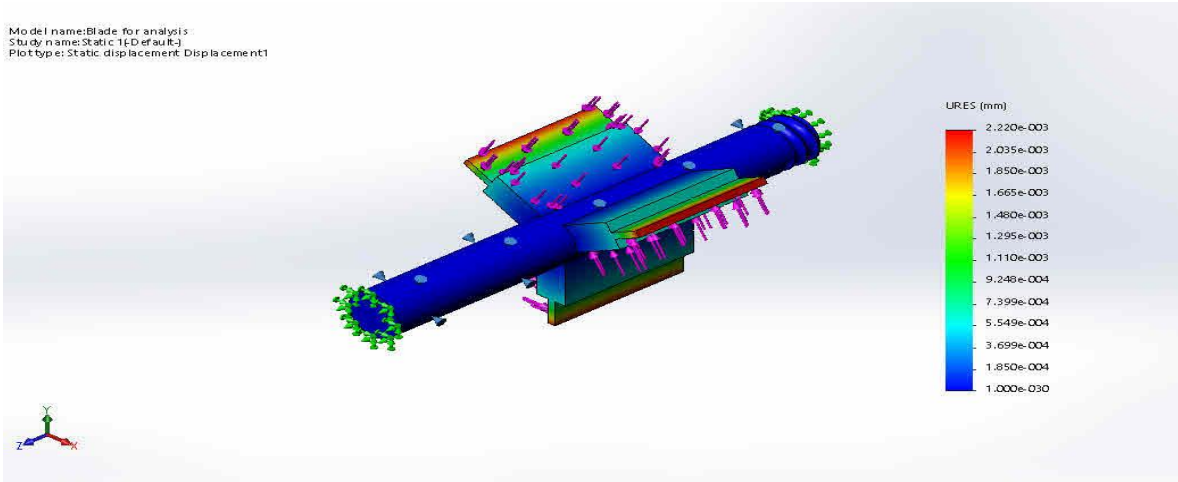

Figure 4.7: Result of Displacement Obtained from the Crushing Blade Analysis

It can be seen from the above that when a force of 3000N is applied on the cutting blade with all the conditions stated above taken into consideration. The maximum von Mises stress is 2.089e+006N/m^2 at Node: 8523, and the minimum is 1.268e+000N/m^2 at Node: 10247. The yield stress of the material was found to be **2.92e+008 N/m^2, and** applying a force of 3000N on the cutting blade produced a maximum displacement of 2.220e-003 mm. This therefore imply that the material will not fail when subjected to a force equal to and below that value. The temperature rise is 3K which is in the safe zone and will not result in any temperature deformation of the bottles.

CHAPTER FIVE
CONCLUSION AND RECOMMENDATION

5.1 Conclusion

The plastic waste bottle crushing machine was successfully designed. The plastic bottle crushing machine was designed for plastic waste recycling mainly for domestic and commercial use in Nigeria. Performance evaluation was carried out on the crushing machine and the results obtained showed that the machine was efficient and can be used in Nigeria cities for plastic solid waste reduction. The designed plastic waste crushing machine can be used to reduce the volume of plastic bottle wastes dump indiscriminately across Nigeria cities and this will ensure average Nigerians live in a healthy environment. Moreover, an efficiency of 82.2% was recorded which showed that the machine can be used commercially in a small scale.

5.2 Recommendations

Having carried out the research work, these were my recommendations:

1. The design and production of PET bottles waste crushing machine be looked into by the industry, considering the large population of Nigeria which is expected to brings about increase in quantity of PET bottles waste.
2. The fabricated prototype machine be further developed for productivity and performance.
3. The machine should be taken up by commercial bodies for the purpose of mass production for the cottage industry

References

Allen, B. (2017) Demand for PET Packaging Material to reach $60 billion by 2019, Smithers Pira. [online] available from: http://www.smitherspira.com/news/2014/april/demand-for-PET- packaging-material-in-2019 [20 January, 2017]

Al Seadi, T. (2001) Good practice in quality management of AD residues from biogas production. Report made for the International Energy Agency, Task 24- Energy from Biological Conversion of Organic Waste. Published by IEA Bioenergy and AEA Technology Environment, Oxfordshire, United Kingdom.

Australian Productivity Commission (2006). "Productivity Commission Inquiry Overview". Waste Management Report no. 38, Canberra. Melbourne: Media and Publications Productivity Commission Locked Bag 2 Collins Street East. p.27, ISBN 174037 208 5.

Australian Environmental Protection Agency (A.U EPA) (2009). "Waste Guidelines/Definitions". EPA 842/09, p.6. [Online] Available from: http://www.epa.sa.gov.au/files/4771336_guide_waste_definitions.pdf. [Accessed: 13th August 2015].

Adewole, A.T. (2009). "Waste Management towards Sustainable Development in Nigeria". A Case Study of Lagos State. International NGO Journal Vol. 4 (4). p.174, ISSN 1993–8225.[Online] Available from: http://www.academicjournals.org/article/ article1380901268_Adewole.pdf. [Accessed: 12th, August 2015].

Akintokun, P.O., Adekunle, I.M., Adekunle A.A., Akintokun A.K., And Arowolo, T.A. (2012). "Recycling of organic wastes through composting for land applications". A Nigerian experience. Waste management & research, 29(6), p.582-93. doi: 10.1177/0734242X10387312.

Alejandro V. And Eder P. (2014). "End-of-Waste Criteria for Waste Plastic for Conversion". Joint Research Centre (JRC) European Commission. Report EUR 26843 EN, JRC91637, doi: 10.2791/13033, p.47, ISBN 978-92-79-40944-8. Luxembourg: Publications Office of the European Union. [Online] Available from: https://ec.europa.eu/jrc/sites/default/files/2014-jrc91637_.pdf. [Accessed: 12th August 2015].

American Chemistry Council (2010). "Better Living with Plastics". [Online] Available from: http://plasticsinfo.org/Functional-Nav/FAQs/Beverage-Bottles. [Accessed:12th August 2015].

Botkin And Keller, B.D., A.E. (1998). "Environmental Science: Earth as a living planet" 2nd Edition. New York: John Willey and Sons Inc. p.527-580.

Brandup et al., (1996) Recycling and Recovery of plastic, 1996

Bruvoll, A. (2001) Factors influencing solid waste generation and management. Journal of solid
waste technology and management, 2001. 27(3/4): p. 156-162.

Brydson, J. A. (1997) plasic materials, 1997.

Briston, J. H. (1994) Rigid and Semi- Rigid plastic containers.

Cortese, A.D. (2003). The critical role of higher education in creating a sustainable future. Planning for higher education, 2003. 31(3): p. 15-22.

Dimitris S.A (Ed), Lefteris A., Ioannis A.K, Dimitra A.L, Nikolaos P.N, Panoraia S., Ioannis T.

And Georgia T. (2012). "Recent Advances in the Chemical Recycling of Polymers (PP, PS, LDPE, HDPE, PVC, PC, Nylon, PMMA)". Material Recycling - Trends and Perspectives. Laboratory of Organic Chemical Technology, Department of Chemistry, Aristotle University of
Thessaloniki, Thessaloniki Greece. pp.3-4, ISBN: 978-953-51-0327-1.

Elias, H. G., An introduction to plastics. 2003: vchverlagsgesellschaft

European Commission (2011). "Waste gases and process emissions sub-installation" Guidance Document n°8 on the harmonized free allocation methodology for the EU-ETS.
p.4. [Online] Available from: http://www.minzp.sk/files/oblasti/ovzdusie/gd8_wastegases_
110414.pdf. [Accessed: 13th August 2015].

Edward .A. Muccio. (1995) plastic part technology.

Eguniobi, E. (1996). "Fundamentals of urban administration in Nigeria". Enugu: HRV Publishers, pp.98.

European Commission (2013) End-of-Waste Criteria for Waste Plastic for Conversion-Technical Proposals, Final Draft Report March 2013, IPTS Seville, Spain. Institute for Prospective Technological Studies.

European Federation of Bottled waters (2012), EFBW AISBL, Rue de l'Association 32, [online] available at <info@efbw.org> [5 December 2016]

Fisher E., Lange B., And Scotford E. (2013). "Environment Law (Text, Cases and Materials)".
pp.708, ISBN 978-0-19-927088-0. [Online] Available from:
https://books.google.com.ng/books?isbn=0199270880. [Accessed: 13th August 2015].

Foltran, L.S. (2013). "Guideline to FCM and Food Grade Declarations focus on plastic

regulation 10/2011", p.16. ISBN 6050330905, 9786050330908. [Online] Available from:
https://books.google.com.ng/books?isbn=6050330905. [Accessed: 13th August 2015].

Great Soviet Encyclopedia (1944), crushing in Engineering.

Gill, G. O. (1988) The hazard of infection from the shared communion cup, Journal of Infection 16(1) 3-23

Hans-Georg Elias (2003) Introduction to plastics.

Hanser Munich et al., An Introduction to Injection Moulding., 2nd edition, 2008

Harper, c. A., et al; plastic materials and processes. 2003: wiley online library.

Hopewell, J., Dvorak, R. and Kosior, E. (2009) Plastics recycling: challenges and opportunities. Philosophical Transactions of the Royal Society B: Biological Sciences 364(1526), 2115–2126.

Hayden, K. W., Jaimys, A., Russell, J. C. and Elena, P. I. (2013) Plastic Degradation and Its Environmental Implications with Special Reference to Poly(ethylene terephthalate) *Polymers 5*(1), 1-18

Hurd, D.J. (1995). "Best Practices and Industry Standards in PET Plastics Recycling".
Washington State Department of Community, Trade and Economic development's clean
Washington center. New York: Bronx 2000 Associates, Inc. 1809 Carter Avenue Bronx,
Ny 10457. p.1-4. [Online] Available from: http://www.napcor.com/pdf/Master.pdf.
[Accessed: 13th August 2015].

Igbinomwanhia, D.I. (2011). "Status of Waste Management, Integrated Waste Management".
Volume II, ISBN 978-953-307-447-4. p.22. [Online] Available from:
http://www.intechopen.com/books/integrated-waste-management-volume-ii/status-ofwaste-management. [Accessed: 13th August 2015].

International Life Sciences Institute Europe (ILSI) (2000). "Report on Packaging Materials: 1. Polyethylene Terephthalate (PET) for Food Packaging Applications". ISBN: 1-57881-092-2, p.5. Brussels: Belgium. [Online] Available from:
http://www.ilsi.org/europe/publications/r2000pac_mat1.pdf. [Accessed: 13th August 2015].

Inge, L. And Arnold, V.K. (eds.) (I995). "Plastic Waste: Option for Small Scale Resource
Recovery, Urban Solid Waste". Series 2. Amsterdam: TOOL Publications and WASTE
Consultants. ISBN: 90-70857-34-0. p.23. [Online] Available from:
http://www.ircwash.org/sites/default/files/Waste-1995-Plastic.pdf. [Accessed: 13th August, 2015].

Ing. Heino, V. (2000). "Small Scale Recycling of Plastic Waste". Technical Information W10e. p.2. Eschborn: Germany. [Online] Available from: http://www.gateinternational. org/documents/techbriefs/webdocs/pdfs/w10e_2000.pdf. [Accessed: 13th August 2015].

Institute For Prospective Technological Studies (IPTS) (2013). "End-of-Waste Criteria for waste plastic for conversion". Seville: Spain. p.11. [Online] Available from: http://susproc.jrc.ec.europa.eu/activities/waste/documents/EoWPlasticsfinalDrepMar2013 WEB.pdf. [Accessed: 13th August 2015].

Kamal, E.Y. (2010). "Management of PET bottles Waste through Recycling in Khartoum State". Sudan Academy of Science Engineering Research and Industrial Technology Council. p.22. [online] Available from: http://www.iaea.org/inis/collection/NCLCollectionStore/_Public/44/007/44007611.pdf. [Accessed: 13th August 2015].

Kadafa, Adati A., Latifah, Abd Manaf, Abdullah, Hosabrina, Sulaiman, And Wan Nur Azmin (2012). "A Review on Municipal Solid Waste Management in Nigeria". Journal of American Science 8(12) p.975-982. ISSN 1545-1003. Department of Environmental Management, Faculty of Environmental Studies, University Putra Malaysia.

Klundert et al (1995) Recycling and Recovery of plastics, 1995.

Leian B., Imran M., Bong G., Al-Masry W.A. And Do Hyun K. (2012). "Recent Developments in the Chemical Recycling of PET". Material Recycling - Trends and Perspectives, Dr. Dimitris Achilias (Ed.), p.65. ISBN: 978-953-51-0327-1, InTech. [online] 88 Available from: http://cdn.intechopen.com/pdfs-wm/32561.pdf. [Accessed: 13th August 2015].

Lukkassen, D. And Meidell, A. (2007). "Advanced Materials and Structures and Their Fabrication Process". Book manuscript, Narvit University College, HIN. p.34. [online] Available from: http://citeseerx.ist.psu.edu/messages/downloadsexceeded.html. [Accessed: 13th August 2015].

Metin, E., et al; solid waste management practices and review of recovery and recycling operations in turkey. Waste management, 2003: 23(5): p. 425-432.

National Association For Pet Container Resources (NAPCOR) (2011). "PET makes good packages for food and non-food items". [online] Available from: http://www.napcor.com/PET/whatisPET.html. [Accessed: 13th August 2015].

Nir M., Miltz J., And Ram J. (1993). "Update on Plastics and the Environment: Progress and Trends". Plastic Engineering Vol. 49, No. 3, p.68, ISSN 0091-9578.

Nya, J.J. (2013). "A Feasibility Study on Recycling of Plastics wastes into useful Energy and its Management System in the Gambia". Case Study: Division of Natural and Physical Sciences, University of the Gambia, West Africa. Vol. 1, No. 2. p.30. [Online] Available from: http://crmb.aizeonpublishers.net/content/2013/2/crmb29-45.pdf. [Accessed: 13th August 2015].

Ojoawo, S., Agbede, O. and Sangodoyin, A. (2011) On the Physical Composition of Solid Wastes in Selected Dumpsites of Ogbomosoland, South Western Nigeria. Journal of Water Resource and Protection 3 (9)

Okpala, I.C (2002). "Practical Guide to Environment Auditing, Excellence Environmental System". Lagos: Vinez Books. p.98.

Oseni, B. (2012) Municipal Solid Waste Management in Developing Countries (Part II), Environment of Nigeria. [online] available from <http://nigeriaenvironment.blogspot.com.ng/2012/12/municipal-solid-waste- management-in_11.html?m=1> [30 January 2017].

Plastic Waste Management Institute (PWMI) (2009). "An Introduction to Plastic Recycling". p.20-24. [Online] Available from: https://www.pwmi.or.jp/ei/plastic_recycling_2009.pdf. [Accessed: 13th August 2015].

Plastic waste management institute (PWMI) (2004) An introduction to plastics recycling, 2004. Tokyo

Pet Resin Association (PETRA) (2012). "PET Basics". p.1. [Online] Available from: http://www.petresin.org/faq.asp. [Accessed: 13th August 2015].

Plastic Waste Management Institute (PWMI) (2009). "An Introduction to Plastic Recycling". p.20-24. [Online] Available from: https://www.pwmi.or.jp/ei/plastic_recycling_2009.pdf. [Accessed: 13th August 2015].

Pringle, R. And M. Barker, Starting a waste plastic recycling business.2004, citeseer.

Ravi D.B., Dhruv K.S., Ashish R.A., Snehal S.P., Shaishav A.P., And Manish K.M. (2014). "Prepare Alternate Fuel from the waste plastic". International Journal of Advanced Engineering Technology. Mechanical Engineering Department, Shree Swami Atmanand Saraswati Institute of Technology, Surat-395006 India. p.12, E-ISSN 0976-3945. [Online] Available from: http://www.technicaljournalsonline.com/ijeat/VOL%20V/IJAET%20VOL%20V%20ISSU90E%20III%20JULY%20SEPTEMBER%202014/Article%2002%20V%20III%202014.pdf. [Accessed: 13th August 2015].

Recycling Consortium (2014). “Primary, Secondary and Tertiary Recycling Explained”. [Online] Available from: http://www.recyclingconsortium.org.uk/primary/index.htm. [Accessed: 13th August 2015].

Tester, J. F., Drake, E. M., Driscoll, M. J., Golay, M. W., and Peters W. A. (2005) Sustainable Energy-Choosing Among Option. PHI Learning Private Limited, New Delhi-110001. ISBN: 9788120329034

Thakur, P. (2012). “Screening of Plastic Degrading Bacteria from Dumped Soil Area”. Department of Life Science, National Institute of Technology Rourkela-769008, Odisha. p.1. [Online] Available from: http://ethesis.nitrkl.ac.in/3141/1/pooja_thesis_1.pdf. [Accessed: 13th August 2015].

Titus, E.A. And Anim, O.A. (2014). “Appraisal of Solid Waste Management Practices in Enugu City, Nigeria”. Department of Geography and Environmental Science, University of Calabar, Nigeria. A Journal of Environment and Earth Science. Vol. 4, p.98, ISSN 2225-0948. [Online] Available from:http://www.iiste.org/Journals/index.php/JEES/article/viewFile/10254/10460. [Accessed: 13th August 2015].

Tukker., plastic Waste Feedstock Recycling and Incineration, volume 13,2002.

Tukur, Aminu (2012). "PET bottle use patterns and antimony migration into bottled water and soft drinks: the case of British and Nigerian bottles". Journal of Environmental Monitoring. 14 (4): 1236–1246.

United Nations Environment Programme (UNEP) (2009). “Converting Waste Plastic into a resource”. United Nations Environmental Programme Division of Technology, Industry and Economics International Environmental Technology Centre, Osaka/Shika. p.10, 12-73. [Online] Available from: http://www.unep.or.jp/Ietc/Publications/spc/WastePlasticsEST_Compendium.pdf. [Accessed: 13th August 2015].

U.S Environmental Protection Agency (U.S EPA) (2013). “Non-Hazardous Waste Management Hierarchy”. [Online] Available from: http://www.epa.gov/osw/nonhaz/municipal/hierarchy.htm. [Accessed: 13th August 2015].

Venkatachalam S., Shilpa G.N., Jayprakash V.L., Prashant R.G., Krishna R., And Anil K.K. (2012). “Degradation and Recyclability of Poly(Ethylene Terephthalate)”. DOI: 10.5772/48612, p.77, ISBN: 978-953-51-0770-5. [Online] Available from: http://cdn.intechopen.com/pdfs-wm/39405.pdf. [13 August 2015].

Wright, T.S.A., definitions and frameworks for environmental sustainability in higher education. International journal of sustainability in higher education, 2002. 3(3): p. 203-220.

Appendixes

Appendix 1: Orthographic Drawing of the PET bottle crusher Assembly

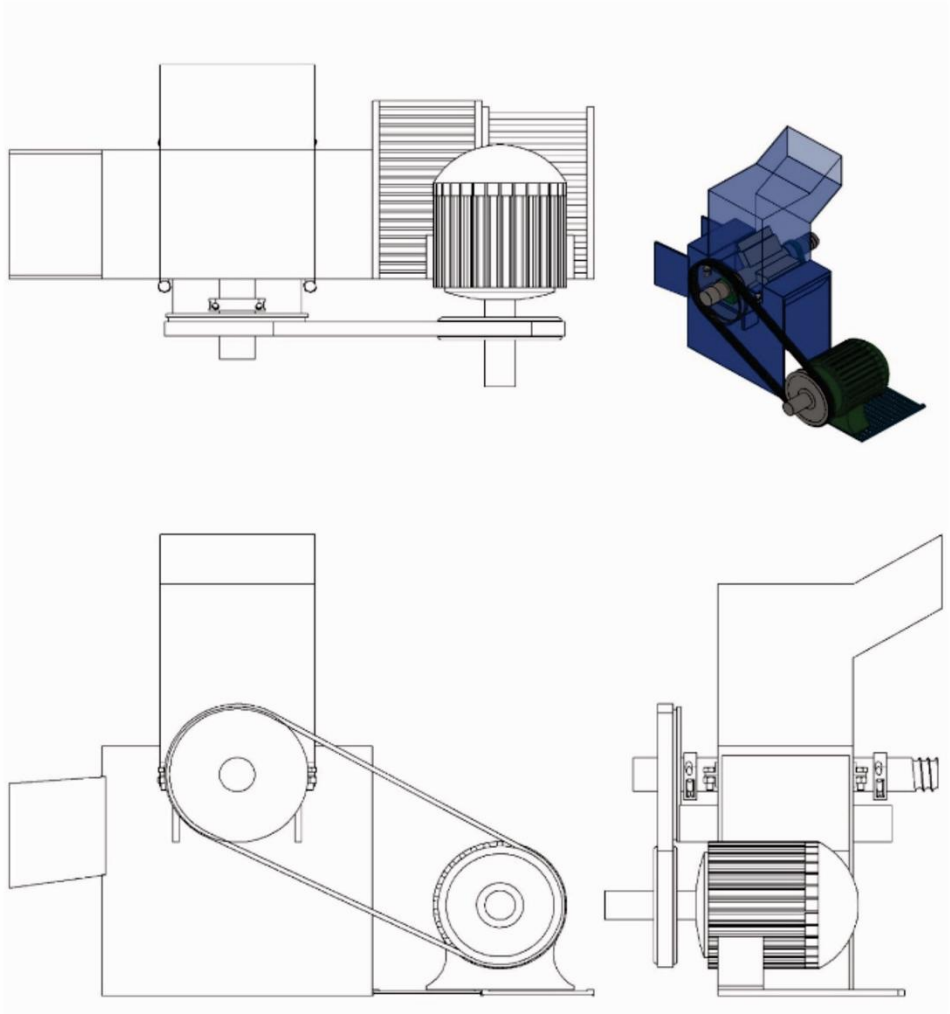

GROUP NO	G22		
TITLE	DESIGN AND FABRICATION OF A PET BOTTLE CRUSHER		
MEMBERS	ANUGBOBA EHIJIELE, IWAYO AMOS OGHENEKARO, OSESU AZIEGBEMHIN		
SUPERVISOR	ENGR. IKECHUKWU OWUNNA		
DATE	SEPTEMBER 21, 2023	SIZE A	DWG NO. ASSEMBLY 12
SCALE	1:10: ISOMETRIC 1:20		

Appendix 2: Part Name and numbers of PET bottle Assembly

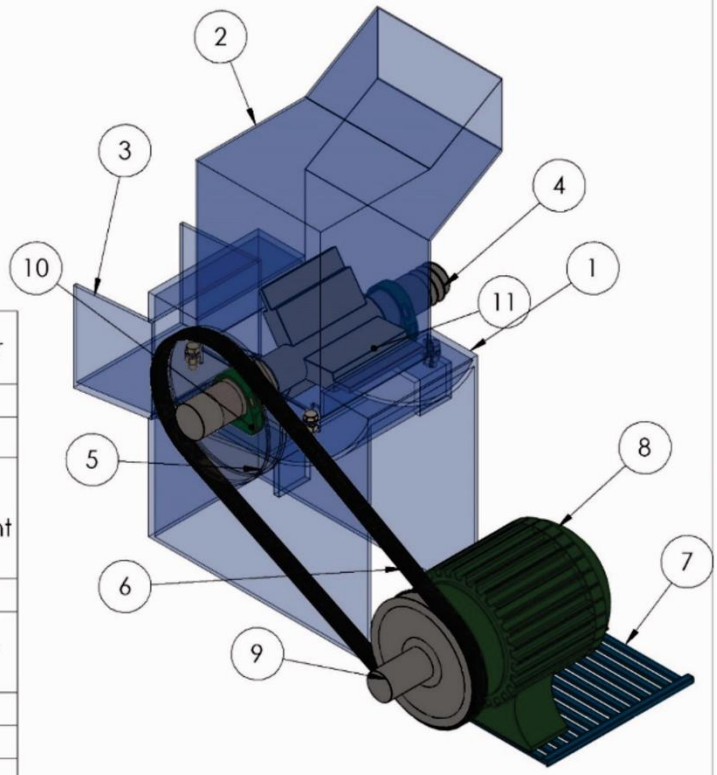

Part Name	Part Number
1	Frame
2	Hopper
3	Collector Compartment
4	Blade Shaft
5	Blade Pulley
6	Belt
7	Motor Base
8	Motor
9	Motor Shaft
10	Bracket
11	Blade

GROUP NO	G22		
TITLE	DESIGN AND FABRICATION OF A PET BOTTLE CRUSHER		
MEMBERS	OGEDEGBE VICTOR, JACK ANDREW, ITEGBOJE DAVID,EMAKPORE TEJIRI		
SUPERVISOR	ENGR. IKECHUKWU OWUNNA		
DATE	SEPTEMBER 21, 2023	SIZE A	DWG NO. ASSEMBLY
SCALE	1:9		

Appendix 3: Orthographic view of the blade

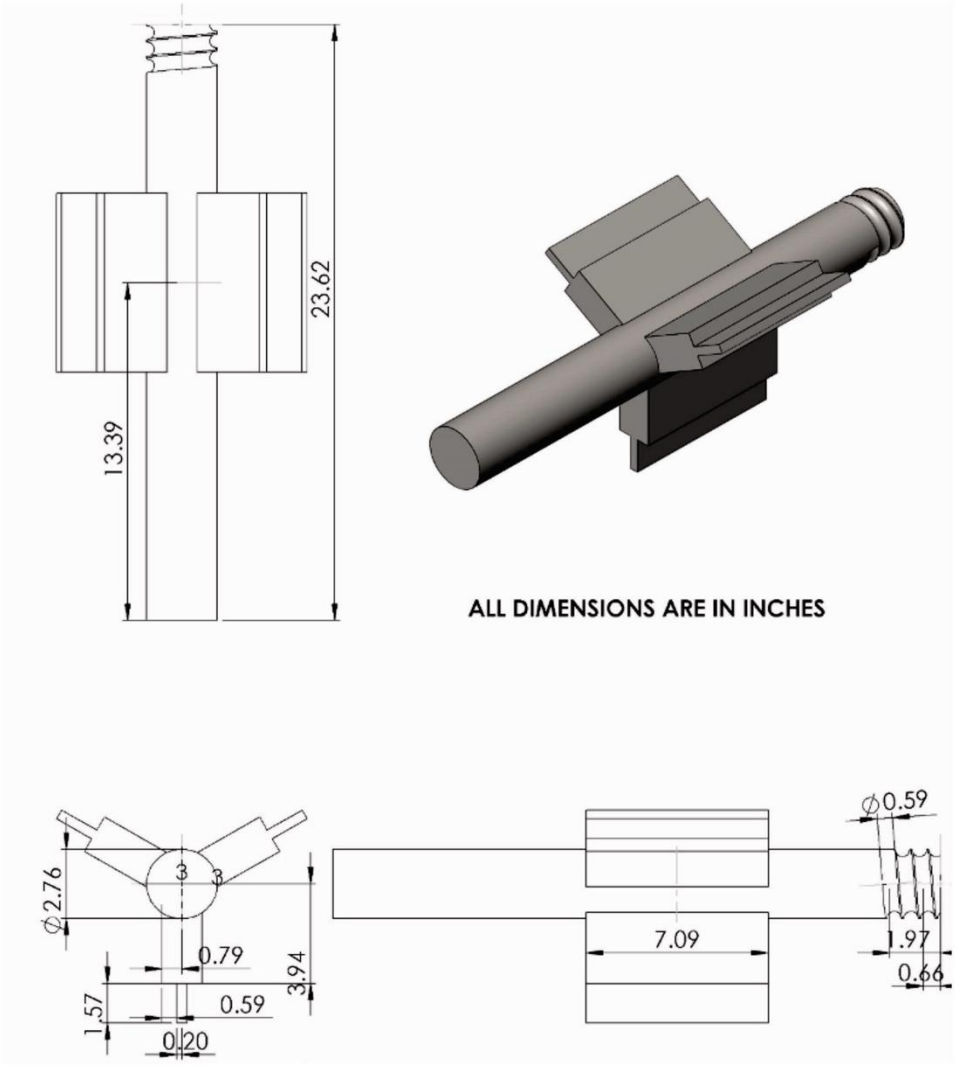

GROUP NO	G22		
TITLE	DESIGN AND FABRICATION OF A PET BOTTLE CRUSHER		
MEMBERS	ANUGBOBA EHIJIELE, IWAYO AMOS OGHENEKARO, OSESU AZIEGBEMHIN		
SUPERVISOR	ENGR. IKECHUKWU OWUNNA		
DATE	SEPTEMBER 21, 2023	SIZE A	DWG NO. BLADE
SCALE	1:5		

Appendix 4: Orthographic view of the hopper

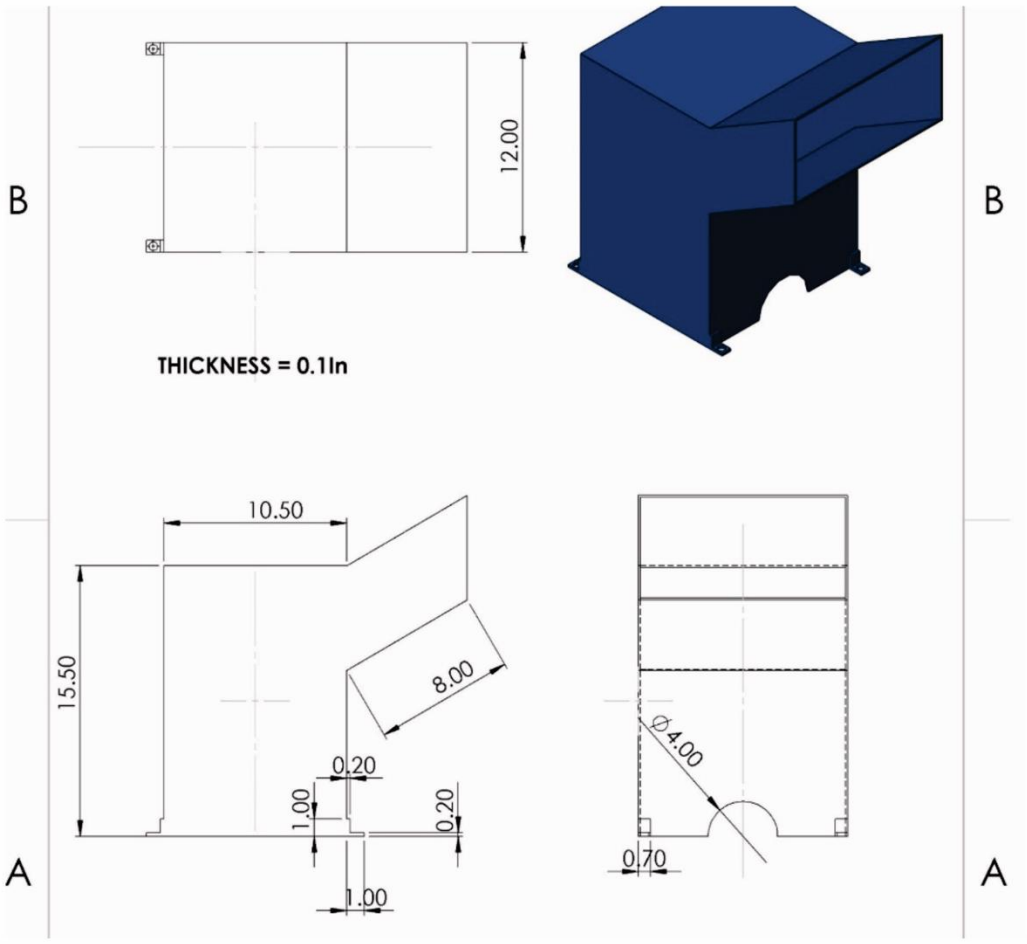

GROUP NO	G22		
TITLE	DESIGN AND FABRICATION OF A PET BOTTLE CRUSHER		
MEMBERS	OGEDEGBE VICTOR, JACK ANDREW, ITEGBOJE DAVID,EMAKPORE TEJIRI		
SUPERVISOR	ENGR. IKECHUKWU OWUNNA		
DATE	SEPTEMBER 21, 2023	SIZE A	DWG NO. HOUSING
SCALE	1:10		

Appendix 5: Orthographic view of the frame

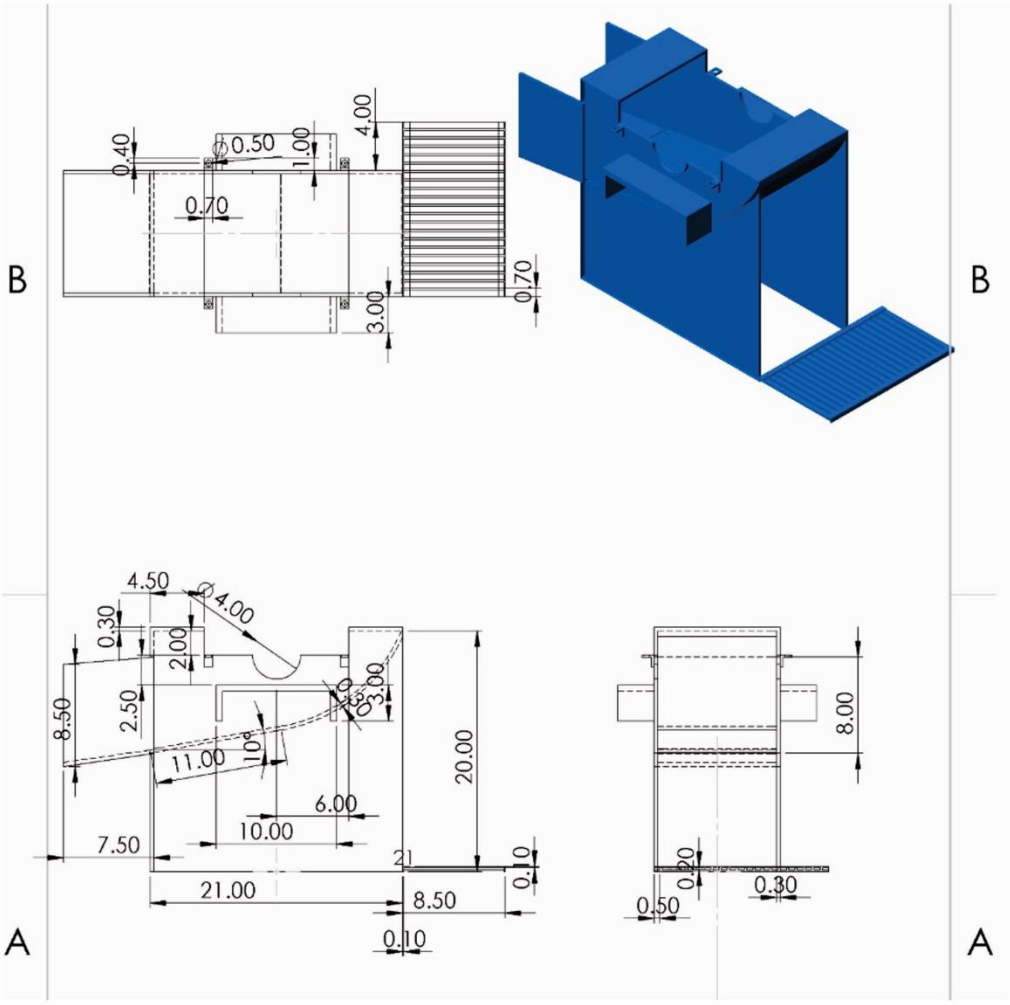

GROUP NO	G22		
TITLE	DESIGN AND FABRICATION OF A PET BOTTLE CRUSHER		
MEMBERS	ANUGBOBA EHIJIELE, IWAYO AMOS OGHENEKARO, OSESU AZIEGBEMHIN		
SUPERVISOR	ENGR. IKECHUKWU OWUNNA		
DATE	SEPTEMBER 21, 2023	SIZE A	DWG NO. HOUSING
SCALE	1:10		

Appendix 6: Pulley for Blade

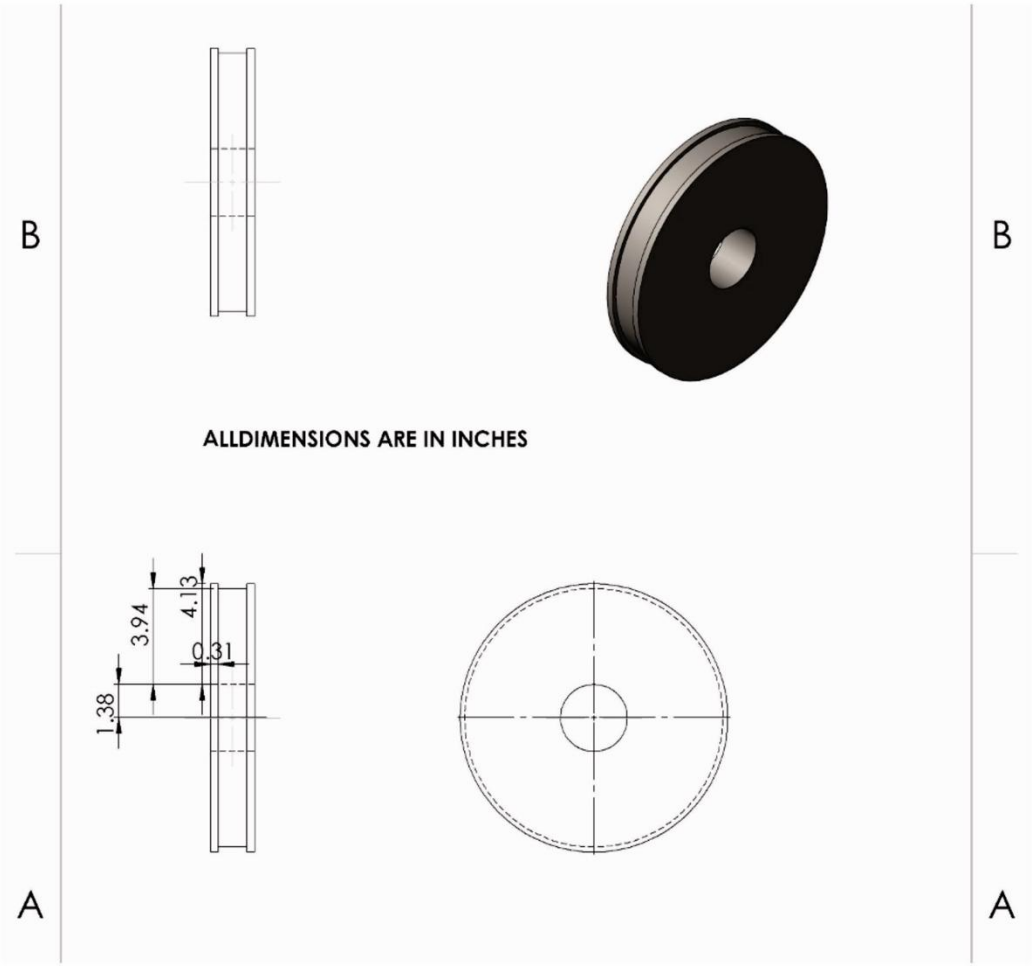

GROUP NO	G22		
TITLE	DESIGN AND FABRICATION OF A PET BOTTLE CRUSHER		
MEMBERS	OGEDEGBE VICTOR, JACK ANDREW, ITEGBOJE DAVID,EMAKPORE TEJIRI		
SUPERVISOR	ENGR. IKECHUKWU OWUNNA		
DATE	SEPTEMBER 21, 2023	SIZE A	DWG NO. PULLEY FOR BLADE
SCALE	1:1		

Appendix 7: Orthographic view of Pulley for motor

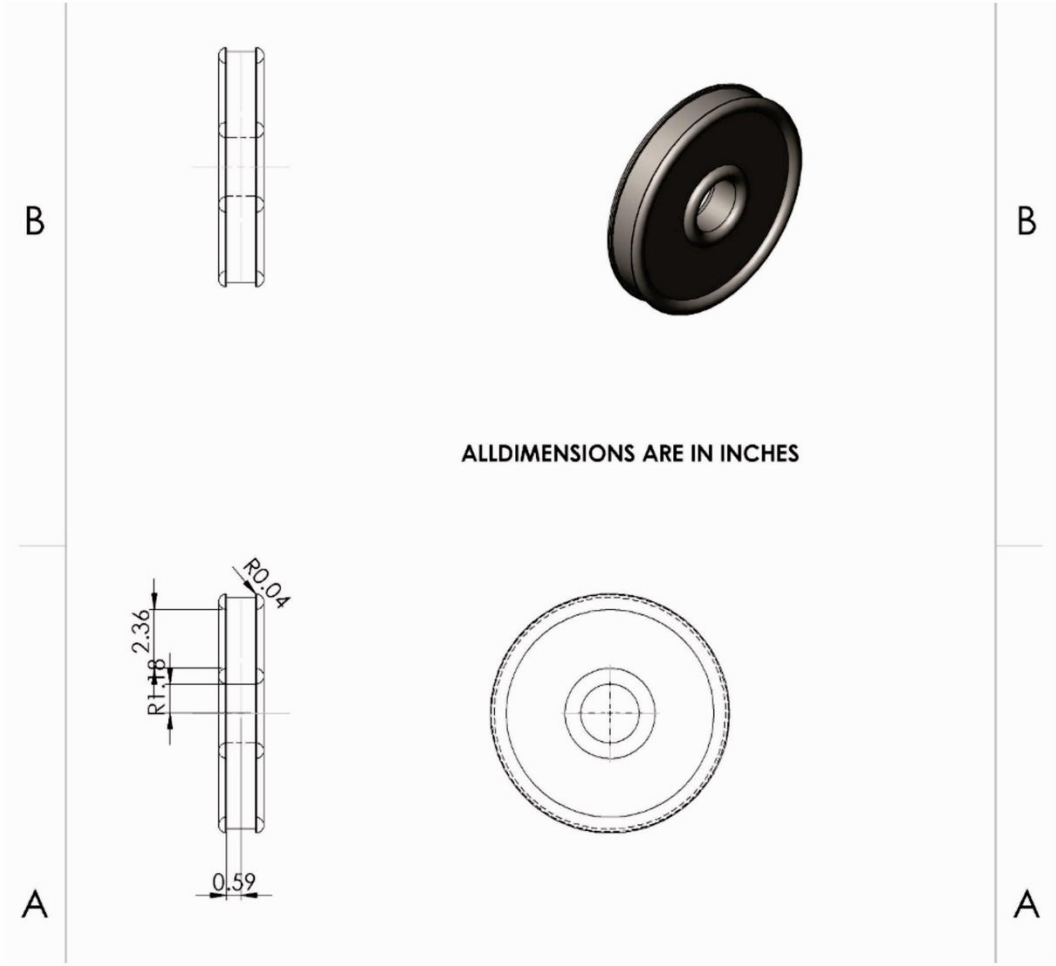

GROUP NO	G22		
TITLE	DESIGN AND FABRICATION OF A PET BOTTLE CRUSHER		
MEMBERS	ANUGBOBA EHIJIELE, IWAYO AMOS OGHENEKARO, OSESU AZIEGBEMHIN		
SUPERVISOR	ENGR. IKECHUKWU OWUNNA		
DATE	SEPTEMBER 21, 2023	SIZE A	DWG NO. PULLEY FOR MOTOR
SCALE	1:5		

Appendix 8: Belt

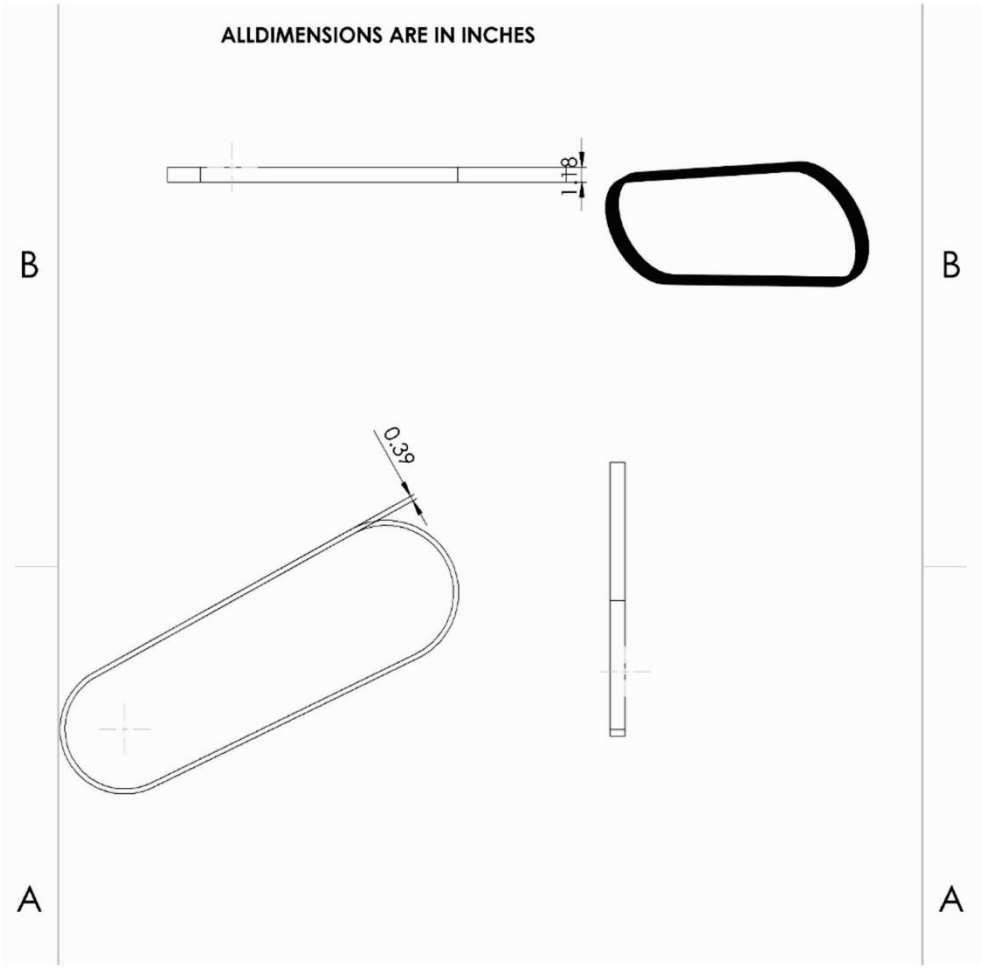

GROUP NO	G22		
TITLE	DESIGN AND FABRICATION OF A PET BOTTLE CRUSHER		
MEMBERS	OGEDEGBE VICTOR, JACK ANDREW, ITEGBOJE DAVID,EMAKPORE TEJIRI		
SUPERVISOR	ENGR. IKECHUKWU OWUNNA		
DATE	SEPTEMBER 21, 2023	SIZE A	DWG NO. BELT 2
SCALE	1:5		

Appendix 9: Shear Strength Testing of PET Bottles using a Knife Edge (Illustration)

Appendix 10: Shear Strength Testing of PET Bottles using a Knife Edge